RFE Series Automatic Transmission Repair

Student Workbook

Book 1.

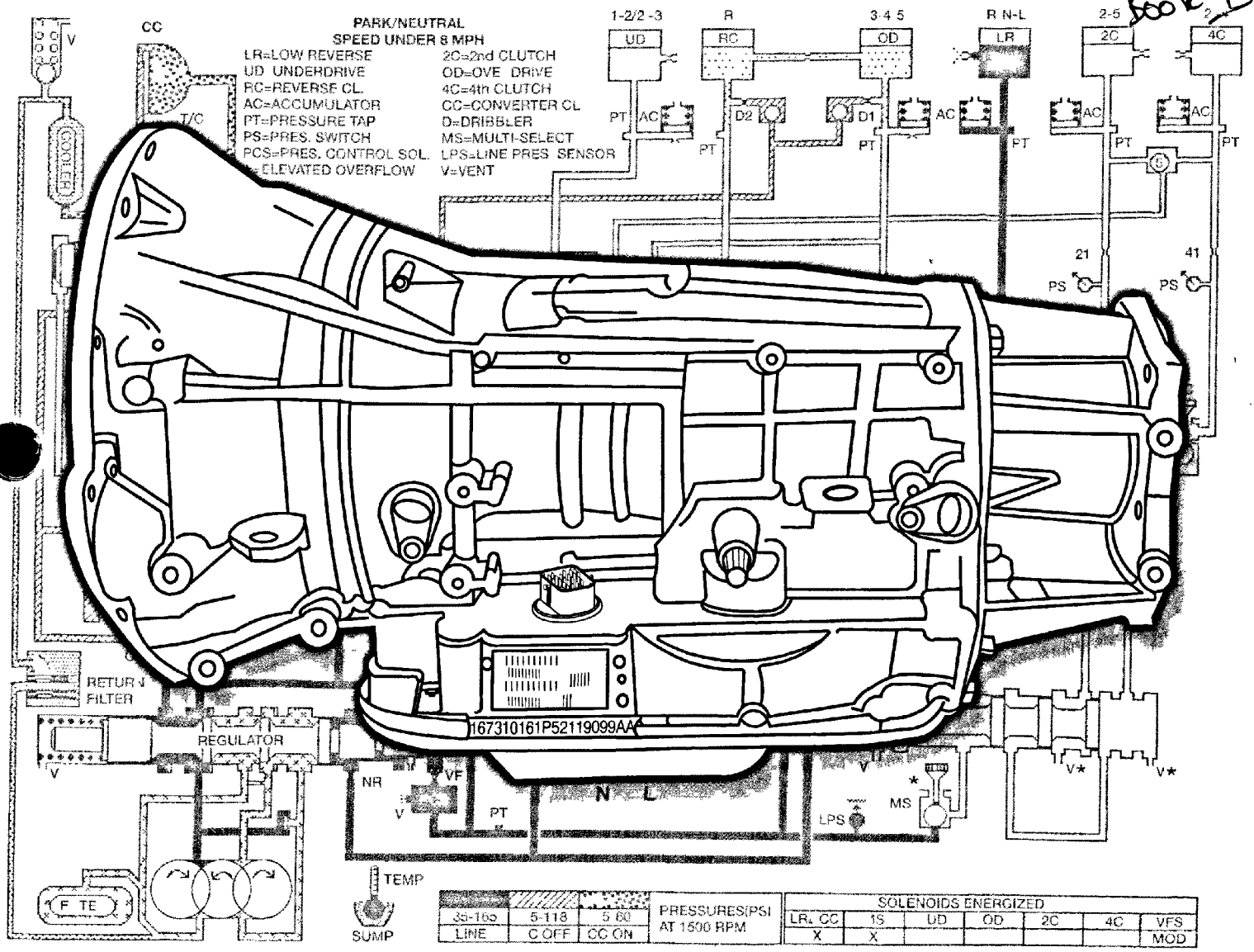

			PRESSURES(PSI AT 1500 RPM	SOLENOIDS ENERGIZED						
35-16o	5-118	5 60		LR, CC	1S	UD	OD	2C	4C	VFS
LINE	C OFF	CC ON		X	X					MOD

DCA

DAIMLERCHRYSLER ACADEMY
School of Technical Training

SAFETY NOTICE

This publication's purpose is to provide Technical training information to individuals in the automotive trade. All test and repair procedures must be performed in accordance with manufacturers service and diagnostic manuals. All ***warnings, cautions,*** and ***notes*** must be observed for safety reasons. The following is a list of general guidelines:

- Proper service and repair is critical to the safe, reliable operation of all motor vehicles.
- The information in this publication has been developed for service personnel, and can help when diagnosing and performing vehicle repairs.
- Some service procedures require the use of special tools. These special tools must be used as recommended throughout this Technical Training Publication, the diagnostic Manual, and the Service Manual.
- Special attention should be exercised when working with spring-or tension-loaded fasteners and devices such as E-Clips, Cir-clips, Snap rings, etc., careless removal may cause personal injury.
- Always wear safety goggles when working on vehicles or vehicle components.
- Improper service methods may damage the vehicle or render it unsafe.
- Observe all ***warnings*** to avoid the risk of personal injury.
- Observe all ***cautions*** to avoid damage to equipment and vehicle.
- ***Notes*** are intended to add clarity and should help make your job easier.

Cautions and ***Warnings*** cover only the situations and procedures DaimlerChrysler Corporation has encountered and recommended. Neither DaimlerChrysler Corporation nor its subsidiaries or affiliates cannot know, evaluate, and advise the service trade of all conceivable ways in which service may be performed, or of the possible hazards for each. Consequently, DaimlerChrysler Corporation and its subsidiaries and affiliates have not undertaken any such broad service review. Accordingly, anyone who used a service procedure or tool that is not recommended in this publication, must be certain that neither personal safety, nor vehicle safety, is jeopardized by the service methods they select.

MASTERTECH

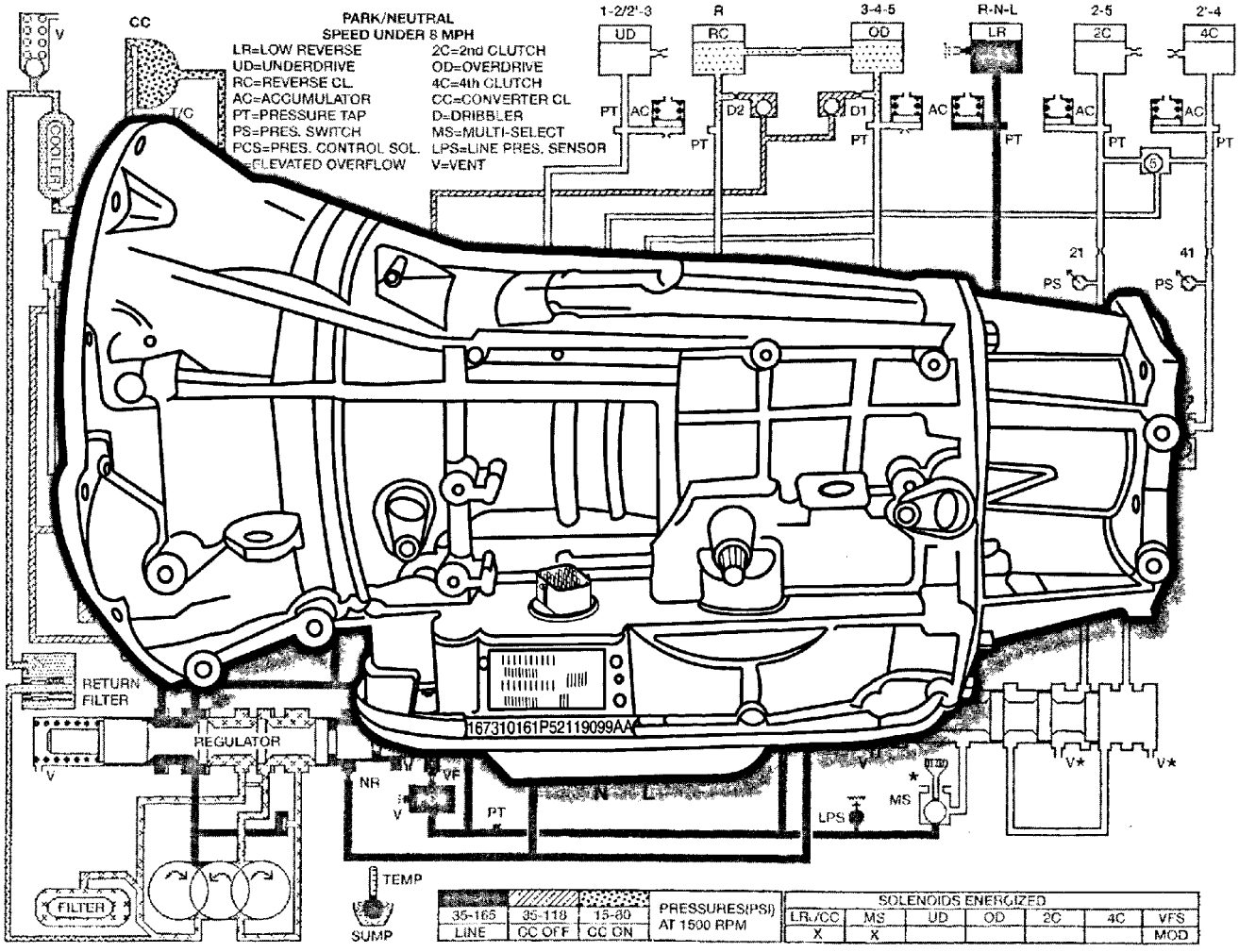
PARK/NEUTRAL
SPEED UNDER 8 MPH
LR=LOW REVERSE
UD=UNDERDRIVE
RC=REVERSE CL.
AC=ACCUMULATOR
PT=PRESSURE TAP
PS=PRES. SWITCH
PCS=PRES. CONTROL SOL.
=ELEVATED OVERFLOW
2C=2nd CLUTCH
OD=OVERDRIVE
4C=4th CLUTCH
CC=CONVERTER CL
D=DRIBBLER
MS=MULTI-SELECT
LPS=LINE PRES. SENSOR
V=VENT
1-2/2'-3
R
3-4-5
R-N-L
2-5
2'-4
UD
RC
OD
LR
2C
4C
CC
T/C
COOLER
RETURN FILTER
REGULATOR
FILTER
SUMP
TEMP
NR
VF
PT
N
L
LPS
MS
21
41
PS
167310161P52119099AA
35-165
LINE
35-118
CC OFF
15-80
CC ON
PRESSURES(PSI)
AT 1500 RPM
SOLENOIDS ENERGIZED
LR/CC
MS
UD
OD
2C
4C
VFS
X
X
MOD

TABLE OF CONTENTS

COURSE INTRODUCTION

This course provides the knowledge and skills for proper bench-repair-diagnosis and repair of the 45RFE/545RFE fully electronic rear wheel drive automatic transmissions. The goals of this course are to provide the technician with all the information necessary to completely disassemble, inspect, successfully reassemble, perform adaptation procedures necessary for the transmission to relearn CVIs, and to properly verify that the repairs that were made corrected an internal malfunction to an RFE series-type automatic transmission.

The RFE series transmissions are found on the following DaimlerChrysler vehicles:

- Dakota (45RFE)
- Durango (45RFE)
- Ram Pick-Up (45RFE/545RFE)
- Liberty (45RFE)
- Grand Cherokee (45RFE/545RFE)

Upon completion of DaimlerChrysler's "RFE Series Automatic Transmission Repair" training course, you will be able to perform the following:

- Locate and decode the transmission identification label.
- Disassemble, evaluate, and inspect the automatic transmission including all sub-assemblies using the appropriate service information.
- Reassemble, setup and make all necessary adjustments to the automatic transmission and all sub-assemblies using the appropriate service information.
- Perform the Quick Learn and Drive Learn procedures using the appropriate service information.
- Verify that the repair corrected the problem.

ACRONYMS

The acronyms listed here are used throughout this course.

- **2 '** Second (2nd) Prime
- **2C** 2nd Clutch or Solenoid
- **4C** 4th Clutch or Solenoid
- **CC** Converter Clutch
- **CVI** Clutch Volume Index
- **DRBIII®** Diagnostic Readout Box
- **DTC** Diagnostic Trouble Codes (DTC Event Data)
- **EMCC** Electronically Modulated Converter Clutch
- **FEMCC** Full EMCC (Fully Engaged)
- **ISS** Input Speed Sensor
- **LPS** Line Pressure Sensor
- **L/R** Low Reverse Clutch or Solenoid
- **MIL** Malfunction Indicator Lamp
- **MS** Multi-Select Solenoid
- **NGC** Next Generation Controller
- **OD** Overdrive Clutch or Solenoid
- **ORC** Overrunning Clutch
- **OSS** Output Speed Sensor
- **PCS/VFS** Pressure Control Solenoid/Variable Force Solenoid
- **PEMCC** Partially Applied EMCC (Not Fully Engaged)
- **PRNDL** Park, Reverse, Neutral, Drive and Manual Low Shift Positions
- **REV** Reverse, Reverse Clutch
- **RFE** Rear Drive, Fully Electronic (45RFE and 545RFE)
- **RWD** Rear Wheel Drive
- **SB** Service Bulletin
- **SLP** Shift Lever Position
- **SSV** Solenoid Switch Valve
- **TCC** Torque Converter Clutch

- **TCM** Transmission Control Module
- **TCR** Transmission Control Relay
- **TPS** Throttle Position Sensor
- **TRS** Transmission Range Sensor
- **TTS** Transmission Temperature Sensor
- **UD** Underdrive Clutch or Solenoid
- **VSS** Vehicle Speed Sensor

MODULE 1 TRANSMISSION OVERVIEW

The RFE series are multi-range, fully electronically controlled automatic transmissions designed for use in light- to medium-duty applications. These transmissions contain three planetary gear sets to provide a wide ratio capability with precise ratio steps for optimum vehicle performance.

The three planetary gear sets in the RFE series automatic transmission make available 4 or 5 forward speeds, reverse and a unique alternate Second gear ratio. The primary Second gear ratio fits between First and Third gears for normal highway accelerations. The alternate Second gear ratio (Second Prime) allows smoother 4–2 kick-downs at higher RPMs. The Second Prime gear ratio also provides increased passing performance over a wide range of highway cruising speeds.

The primary mechanical portions of the transmission consist of the following:

- Torque Converter
- Three Multiple Disc Input Clutches
  (Underdrive Clutch, Overdrive Clutch, Reverse Clutch)
- Three Multiple Disc Holding Clutches
  (4C Clutch, 2C Clutch, L/R Clutch)
- One Overrun Clutch
  (Overrunning Clutch)
- Three Planetary Gear Sets
  (Reaction Planetary, Reverse Planetary, Input Planetary)
- Dual Stage Hydraulic Oil Pump
- Valve Body Assembly, which includes:
  - Solenoid/Pressure Switch Assembly
  - Five Hydraulic Accumulators

MODEL DESIGNATION

The alpha-numeric code used to identify the 45RFE and 545RFE is broken down as follows:

45RFE

- **4** — Four forward speeds
- **5** — Duty rating/torque capacity*
- **R** — Rear wheel drive
- **FE** — Fully electronic

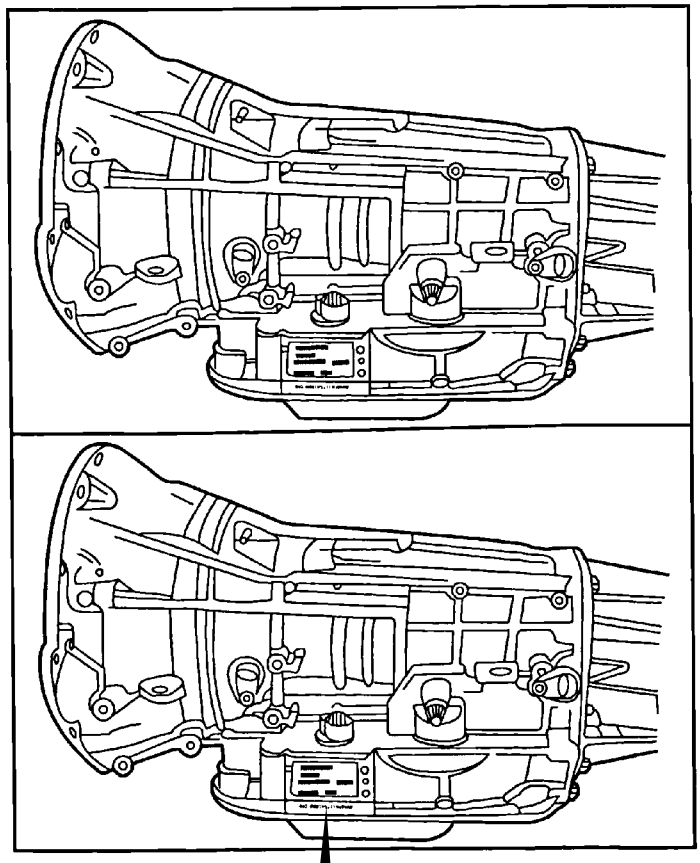

545RFE

- **5** — Speed implementation of 45RFE hardware

*The higher the number, the higher the torque capacity.

I D number
Build date

DIFFERENCE BETWEEN 545RFE AND 45RFE

The primary mechanical components of the 545RFE and 45RFE are the same. Both include the same number of input clutches, the same number of holding clutches, the same planetary gear sets; they are in fact the same mechanical transmission. The difference is in the way the software is programmed into the TCM, which allows the 2C clutch in conjunction with the Overdrive clutch to be applied, thus providing a lower ratio of 0.67:1 in fifth overdrive gear, sometimes referred to as Fourth Prime.

Gear ratios for 45RFE transmissions are as follows:

- **First gear** 3.00:1
- **Second gear** 1.67:1
- **Second Prime** 1.50:1
- **Third gear** 1.00:1
- **Fourth gear** 0.75:1
- **Reverse gear** 3.00:1

Gear ratios for 545RFE transmissions are as follows:

- **First gear** 3.00:1
- **Second gear** 1.67:1
- **Second Prime** 1.50:1
- **Third gear** 1.00:1
- **Fourth gear** 0.75:1
- **Fifth gear (Fourth Prime)** 0.67:1
- **Reverse gear** 3.00:1

RFE IDENTIFICATION

RFE identification is done by decoding the label on the transmission case just above the pan. The part number and build sequence are also stamped in the case below the identification label (fig. 1). The following is an example of the identification code TITTJ167310161 broken down:

- TITTJ = Supplier Code
- 167 = Julian date or day of the year (June 16th 2003)
- 3 = Build year (2003)
- 1 = Transmission Plant build line
- 0161 = Sequence number

The large numbers on the right side of the label (099AA) are the last five digits of the transmission part number.

The last two digits of the ten-digit part number are used to identify the revision level of the transmission. AA indicates the first level, AB would indicate a change.

Proper transmission identification is important when:

- Ordering parts
- Using Star Assistance
- Using Zone Assistance
- Determining Service Bulletin (SB) or recall applicability

SERVICE BULLETINS (SB)

Always check for SBs that may match the customer concern. A SB can provide valuable/current information for diagnosing faults and making the proper repairs.

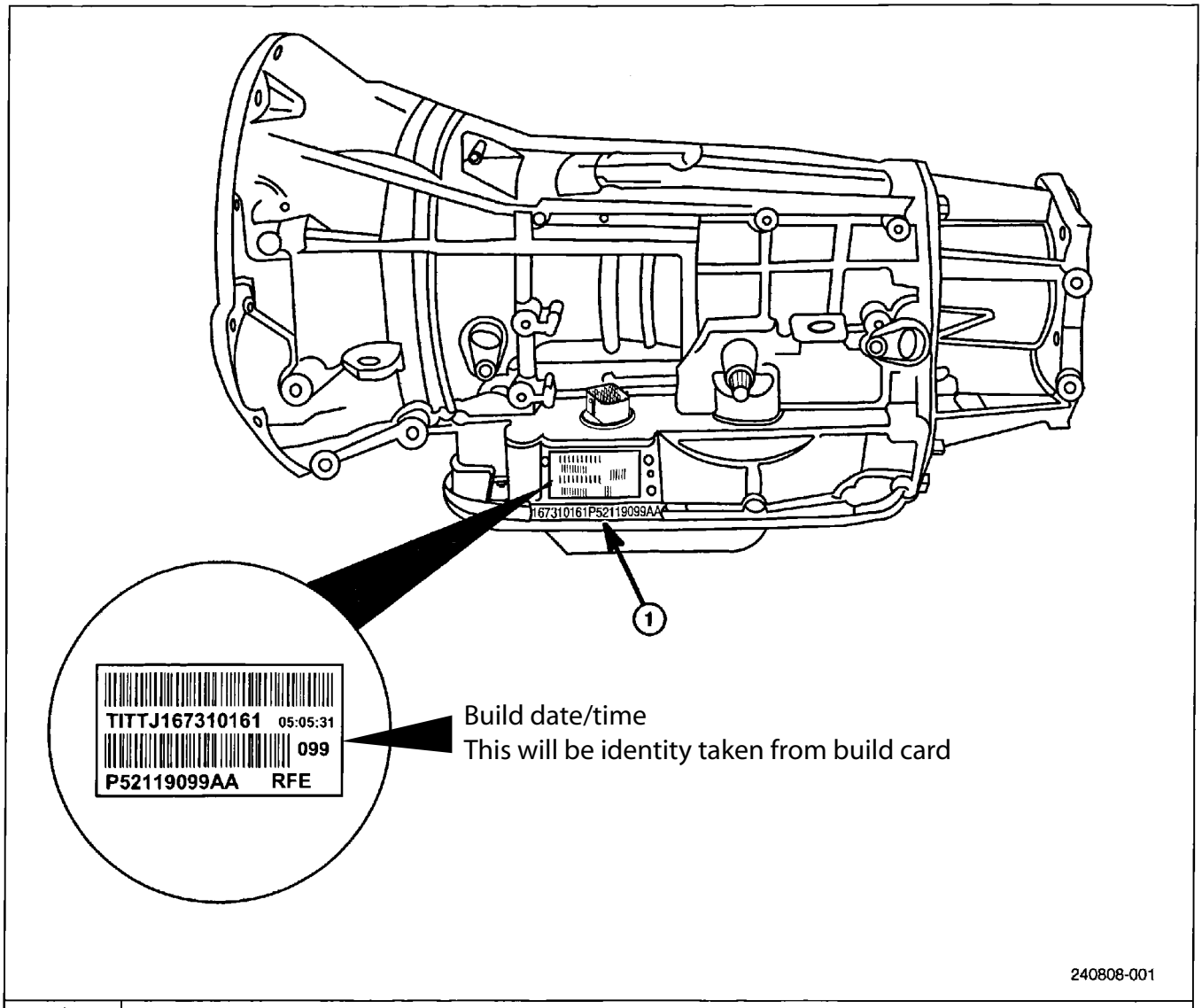

1	Identification Numbers

Figure 1 Transmission Identification

Important note:
If for any reason electrical power to the transmission is cut, it will operate only in "limp home" mode of 2nd or 3rd gear and reverse.

Oil specification:
Daimler Chrysler (DCX) specification MS 9602 (Chrysler ATF +4).
As an example Texaco Texamatic 9620 fulfils this specification.
Note that Chrysler ATF +4 is equivalent to Dexron III 'H' (revised service spec) & Ford Mercon V.
Earlier specs, inc Chrysler ATF+3, Dexron II & Mercon IV must not be used or serious and expensive damage may occur.

Notes:

MODULE 2 TRANSMISSION DISASSEMBLY AND COMPONENT EVALUATION

PRELIMINARY DIAGNOSIS

The technician should always verify conditions related to a customer's concern. The following are examples of some questions that should be answered when diagnosing a shift concern:

- When put into gear, is there any delay before engagement?
- What do the shifts feel like?
- Are the shifts smooth without delay?
- Does the engine flare up between gears?
- Is each gear range achieved?
- Did the shift occur at the correct road speed?

Road testing is an important part of the diagnostic process and must not be overlooked. Drive the vehicle under the same circumstances that the customer indicated when the concern occurred. If the problem occurs when the transmission is cold, the road test should be performed under these same circumstances. Before road testing, the transmission should be inspected for leaks or damage, and all linkage adjustments should be checked and corrected if necessary. When on the road test, be sure to shift the transmission into all gear positions to verify that the transmission shifts the way that it is suppose to shift. This will help to determine if what the customer feels is proper operation.

A visual inspection should also be performed. Check all associated wiring, including harnesses and connectors. Look for fluid leaks, external damage, and in some cases, remove the input and output speed sensors to inspect for metal filings on the magnet. If metal filings are present on the input or output speed sensor magnet, an internal component may be failing. Contaminated or burnt fluid could be caused by an internal failure.

All of these inspections and checks must be performed before the transmission is removed from the vehicle. Line pressure readings, fluid condition, fluid level and checking all connections are all very important in diagnosing transmission problems and must be performed before the transmission is removed from the vehicle.

Symptom-based diagnostics are an essential part of diagnosing the RFE transmission — from preliminary diagnosis to road testing, which includes isolating and repairing the fault. Diagnostic worksheets have been developed to aid in isolating and identifying the fault.

By understanding the operation of the RFE transmissions and using all of the resources available to you it can avoid unnecessary repairs because of errors in analyzing symptoms.

Note: It is important during any diagnosis to follow DaimlerChrysler's Six-Step Troubleshooting procedure in addition to specific procedures for correcting electronic transmission problems.

- Verify the customer concern.
- Determine related symptoms.
- Analyze the symptoms.
- Isolate the problem.
- Repair the problem.
- Verify proper operation.

Troubleshooting process.

- Verify the customer concern.
- Perform a visual inspection.
- Check the SBs.
- Perform a shift lever test.
- Read the DTCs.
- Flash, if necessary.
- Perform a verification test.

BENCH-REPAIR-DIAGNOSIS

Transmission Diagnosis

Because the RFE is a fully electronic transmission, proper diagnostic procedures need to be followed to obtain an accurate repair. It is necessary to understand the RFE electrical/electronic, hydraulic and mechanical systems operation to properly diagnose and repair the transmission. The use of a Diagnostic Scan Tool and TechConnect™ will make diagnosis easier. The Diagnostic Scan Tool can also be used to read DTCs. TechConnect™ can be used to look up SBs and repair history information.

DTCs can direct the Technician to an electronic, mechanical or hydraulic component failure. The TCM uses sensors in the transmission to monitor hydraulic pressure, solenoid operation, input and output shaft speeds including transmission gear ratio. Using the Diagnostic Scan Tool, the Technician can monitor line pressure, pressure switch status and solenoid operation, including actuating solenoids during diagnosis.

The Diagnostic Scan Tool has the capability of collecting data through software that takes a snapshot or freeze frame known as EATX DTC Event Data. This data stores the status of all the transmission parameters at the time of the fault or when the fault code was set.

Line Pressure Checks

There are two available methods to determine line pressure. The Diagnostic Scan Tool can be used to read line pressure from the line pressure sensor. The second and preferred method is to install Line Pressure Adapter 8259 into the transmission case and then, install the pressure gauge and the original sensor into the adapter. This allows a comparison of the Diagnostic Scan Tool readings and the gauge to determine the accuracy of the line pressure sensor. Refer to the appropriate Service Information for specific directions as to fluid status, transmission temperatures and RPMs for performing this test. It is important to collect line pressure data before the transmission is removed from the vehicle.

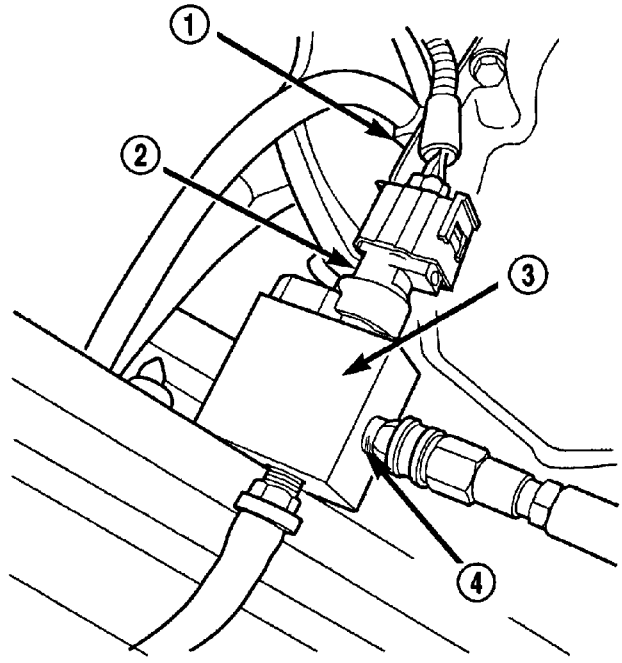

1	Line Pressure Sensor Port	3	Tool 8259
2	Line Pressure Sensor	4	Pressure Tap

Figure 2 Line Pressure Adapter

Clutch Volume Index (CVI) Values

When diagnosing transmission faults, Clutch Volume Indexes (CVIs) should be monitored and recorded. Learned CVIs represent the approximate amount of fluid needed to stroke a clutch piston and execute the appropriate gear ratio. CVIs are updated for each clutch element as it wears and clutch pack clearances increase.

OIL LEAK DIAGNOSIS

Bell Housing Leak Points

Possible sources of leaks at the bell housing are:

- Pump porosity will allow an oil track down the front cover inner seal, but no oil under the seal lip.
- If the converter is wet, it is likely a weld seam joint around the outside diameter or hub weld leak.
- Oil pump leaks can be at the front seal (compression seal) or at the large O-ring seal.
- Reported leaks at the 23-way connector are often caused by case porosity in the shift cable bracket boss, just in front of the connector.
- Any more than a few drops of fluid under the torque converter hub seal lip may indicate a leak at the seal.

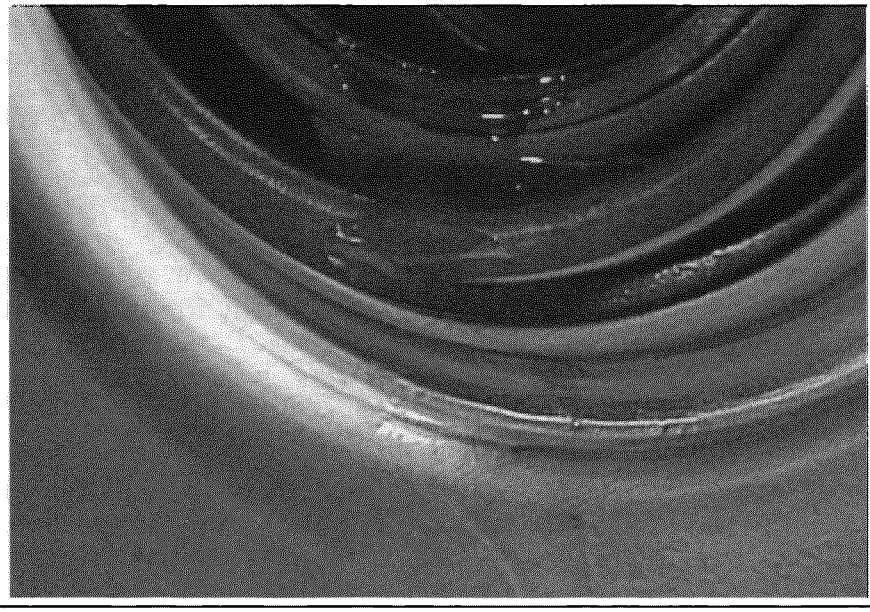

Figure 3 Torque Converter Hub Seal Leak

- In this example the leak is between the seal on the front cover and the front of the oil pump, but no fluid is seen at the lip or pooled up under the seal lip. This leak type is associated with a loose snap ring or snap ring not correctly positioned in the groove.

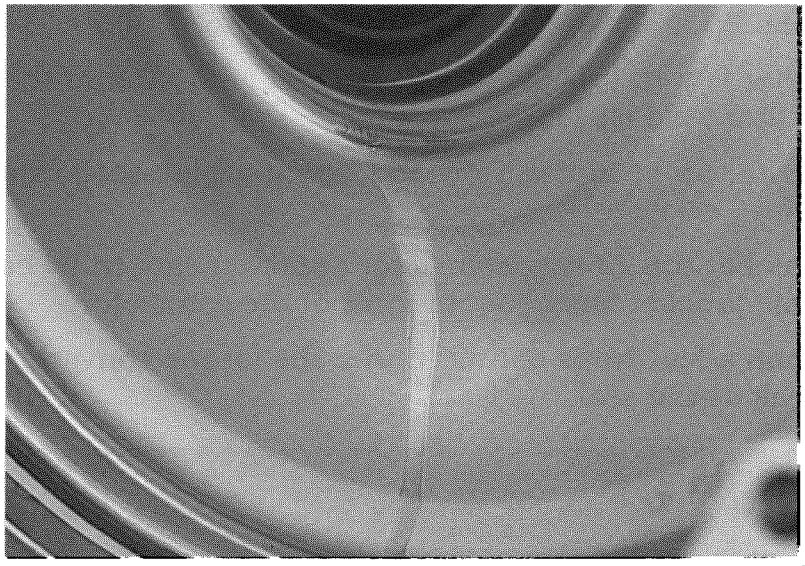

Figure 4 Torque Converter Leak at Seal Case

Transmission Case Leak Detection Using Dye

Begin with a thorough visual inspection of the transmission, particularly at the area of the suspected leak. If a fluid leak source is not readily identifiable, the following steps should be followed:

1. Do not clean or degrease the transmission at this time because some solvents may cause rubber to swell, temporarily stopping the leak.
2. Add a Mopar®-approved dye to the transmission fluid. Lift the drive wheels off the ground, start the engine and let the engine idle to rotate the driveshaft. Allow the engine to idle for 15 minutes. Check the transmission dipstick to make sure the dye is thoroughly mixed as indicated with a bright yellow color under a black light.
3. Using a black light, inspect the entire transmission for fluorescent dye, particularly at the suspected area of the oil leak. Look for the dye in the oil. If the oil leak is found and identified, repair as necessary.
4. If dye is not observed, drive the vehicle at various speeds for approximately 24 km (15 miles), and repeat the inspection.

TRANSMISSION DISASSEMBLY

Transmission Stand Installation and Sensor Removal

Removal of the input and output speed sensors and line pressure sensor from the case prior to beginning transmission disassembly is important to prevent the sensors from being broken off or damaged as the case is turned. Additionally, the input sensor will block removal of the input clutch assembly if not removed first. Installing support stand 8257 is important to stabilize the transmission case during disassembly.

Torque Converter

The Torque Converter Clutch (TCC) is hydraulically operated and electronically controlled. The TCC consists of a piston and a friction disc that provide a direct 1:1 mechanical link between the impeller and turbine when conditions for slippage and torque multiplication are not needed through normal torque converter operation. When pressure is applied to the rear of the TCC piston, TCC engagement is obtained.

TCC operation may be employed in OD, 3rd or 2nd gear, depending on transmission model, application, shift lever position, transmission temperature and other factors.

The hub of the torque converter housing drives the transmission oil pump at engine speed.

Caution: The torque converter must be replaced if a transmission failure resulted in large amounts of metal or fiber contamination in the fluid.

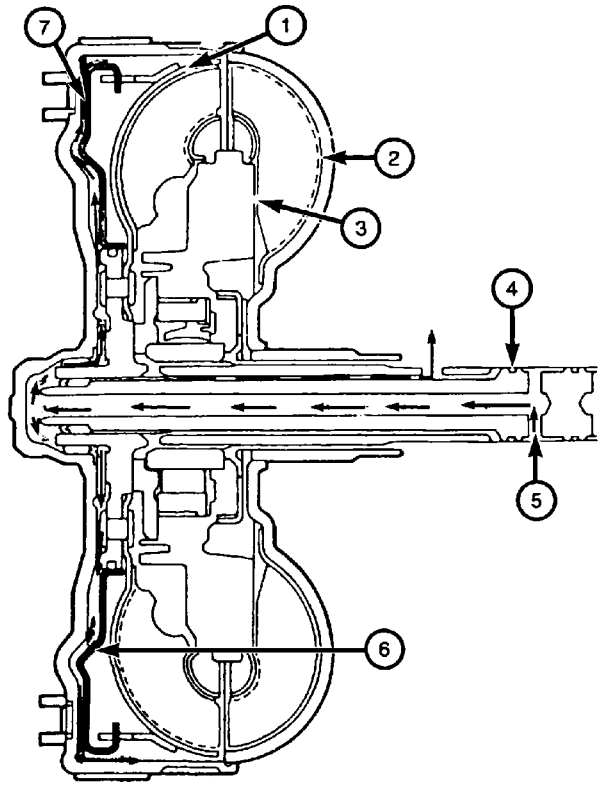

1	Turbine	5	Release Pressure
2	Impeller	6	TCC Piston
3	Stator	7	Clutch Disc
4	Input Shaft		

Figure 5 Torque Converter

Input Shaft End Play

Input shaft end play is a very critical pre-disassembly check to determine the condition of the transmission. End play readings greater than the specification (larger gap) indicate that a bearing or thrust plate is either missing or has disintegrated, in which case there will be debris in the oil pan. End play readings that are below specification (smaller gap) indicate that a bearing is out of position or that the transmission may have been previously set-up incorrectly.

When measuring input shaft end play, two "stops" will be felt. The first "stop" is the movement of the input shaft in the input clutch hub. This first measurement should be recorded and then subtracted from the total dial indicator reading. The last movement will be the actual input shaft end play. To get a true input shaft end play reading, it requires a good deal of force to compress all the thrust bearings.

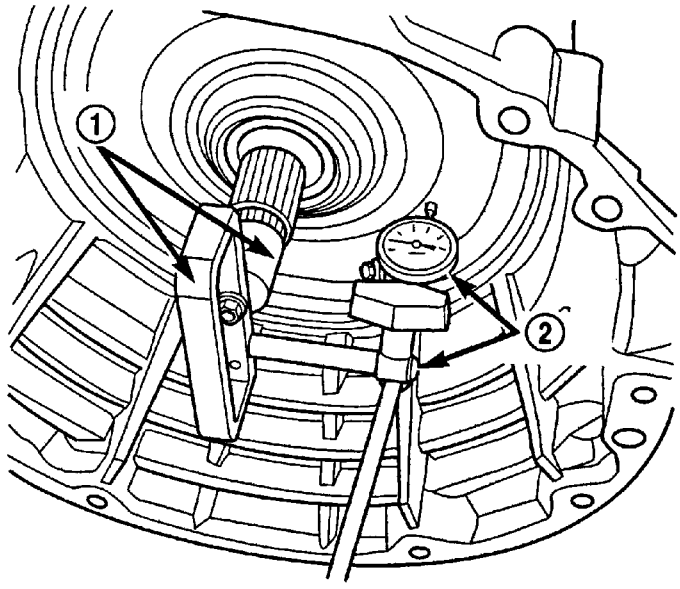

1	Tool 8266	2	Tool C-3339

Figure 6 Input Shaft End Play

FLUID AND FILTER MAINTENANCE

There are two filters in the RFE series transmission. The primary filter is attached to the front pump and submersed in fluid at the bottom of the pan. The second filter is a spin-on type and is screwed to the case next to the valve body in the same circuit as the filter bypass valve. Both filters can be accessed by removing the pan. Filter and fluid service intervals depend greatly on how the vehicle is used. Refer to the vehicle Owners Manual or service information for the appropriate maintenance schedules.

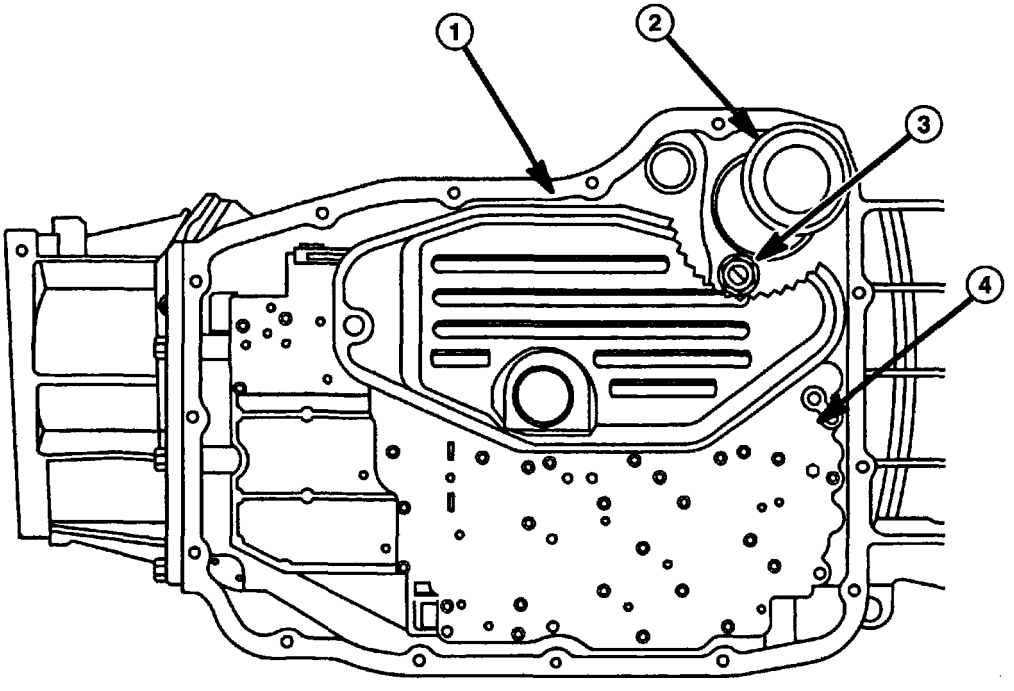

1	Primary Filter	3	Filter Bypass Valve
2	Cooler Filter	4	Valve Body

Figure 7 RFE Series Oil Filters

Note: Four-wheel-drive vehicles use a different primary filter and oil pan than two-wheel-drive vehicle's pan and filter. They are NOT interchangeable. Either filter will fit into any transmission (the pump and case are the same); but if the wrong filter is installed, the pan will interfere with the filter. In both cases (4x4 pan on 4x2 filter or 4x2 pan on 4x4 filter), the pan interferes with the filter before it seats against the case.

Transmission Filter Requirements

The transmission primary oil filter incorporates a filter neck that connects directly to the oil pump rather than the valve body. It is very important that the oil pump connection is correct and the filter neck is properly installed through the filter seal previously installed in the oil pump. It is also very important that the filter neck seal is correctly installed in the oil pump bore before the filter is installed. The seal must be installed with its flange flush against the pump casting, all the way around.

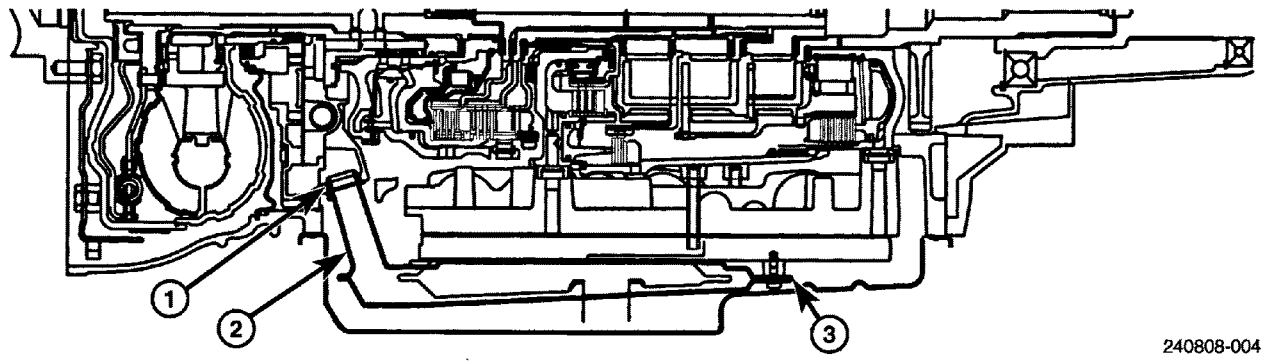

1	Primary Oil Filter Seal	3	Primary Oil Filter Attachment Screw
2	Primary Oil Filter Neck		

Figure 8 Oil Filter Assembly

Note: DO NOT install the seal onto the filter neck and attempt to install the filter and seal as an assembly. This action will allow the oil pump to aerate the fluid and damage the transmission. The seal must be installed "first" before the filter is installed.

Filter Diagnosis

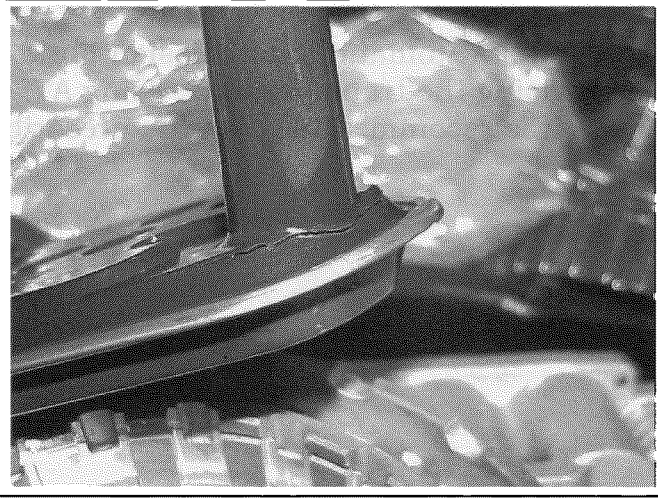

Figure 9 Cracked Filter Neck

Fluid and Filter Failure Analysis

During transmission failure analysis, the oil pan and filter provide key information that should be examined very carefully. As the oil pan is being drained, collect a portion of the fluid for analysis.

- Does the fluid show any signs of contamination or additives?
- Does the fluid show any signs of aeration?

After the oil pan is removed, inspect the oil filter for the following:

- Is the primary oil filter neck cracked or is the neck improperly installed into the oil pump seal? Cracks in the neck or a poor fit between the seal and the neck will allow air to enter the oil pump and aerate the fluid.
- Is the oil pump seal properly installed into the oil pump? The seal should be installed in the oil pump using an appropriately sized socket (which will pilot snugly into the seal) as an installation tool.
- Is the filter contaminated with debris?
  1. If the debris appears to contain fibers, it may be from the clutch discs.
  2. If the debris appears to contain metal, it may be from the thrust plates or steel from the roller bearings.
  3. If the debris appears to contain rubber/Teflon, it may have originated in the towers of the valve body or clutch piston seals.

Careful examination of the pan filter and an improperly installed filter seal can reveal clues to symptoms that the transmission is experiencing that the Diagnostic Scan Tool may not indicate. Debris, contamination or aeration can all cause insufficient oil pressure in the transmission leading to premature transmission failure or converter clutch engagement which can cause a decel engine stall.

Fluid Type

Only Mopar® ATF+4 (Type 9602) Automatic Transmission Fluid is the recommended transmission fluid when servicing the transmission. Using ATF+4 ensures optimum transmission performance. It is recommended that the prescribed fluid level be maintained.

VALVE BODY ASSEMBLY

Use a speed wrench while removing the six valve body-to-case bolts. This is done to allow an opportunity to feel if a bolt or bolts may have lost torque. Loss of torque on a bolt may allow transmission fluid to leak into an adjacent passageway which could cause the transmission to go into Limp-In mode or cause a poor or late shift. After the valve body removal, inspect the tower (passage) seals for damage. The fluid passage pictured below controls the low/reverse clutch circuit. A torn seal similar to this will cause a massive leak and probably not allow the low/reverse clutch to apply.

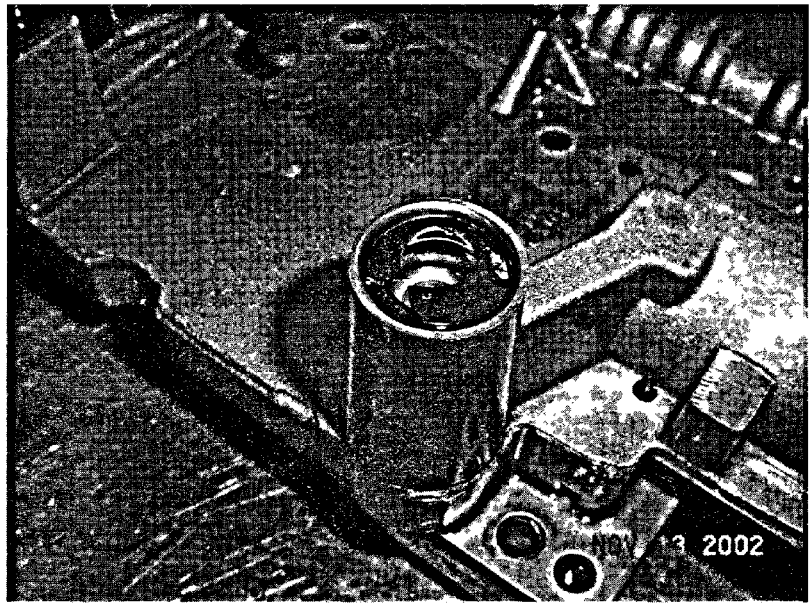

Figure 10 Cut Tower Seal

Check Balls

The seven check balls used in the RFE transmission are located in the cast pockets in the underside of the valve body just above the separator plate. Check balls need to be inspected very carefully for creases or irregularities. Irregularities on a check ball can cause intermittent problems with the transmission's ability to shift.

Remove and install the valve body with the separator plate and transfer plate attached to prevent the check balls from falling out of the cast pockets in the valve body. It is very important in diagnosis to know which check ball came from which pocket. Use the hydraulic flow diagrams in the service information to determine which gears will be affected by a particular leaking check ball.

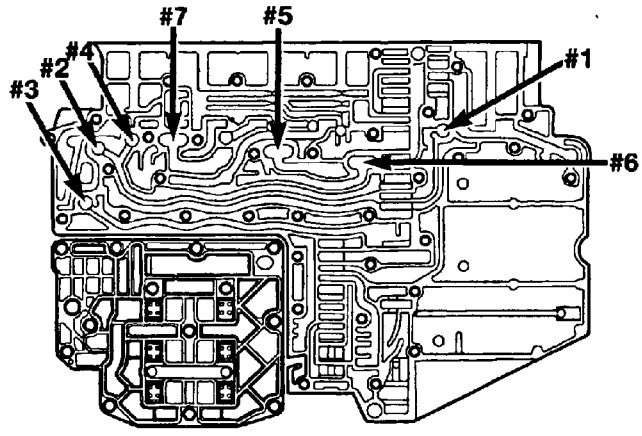

Figure 11 Check Ball Locations

Note: During reassembly, check balls should only be retained using Vaseline® or Trans-Gel. DO NOT use inappropriate greases (such as wheel bearing or white lithium grease).

Check Ball Circuit Descriptions

- The No. 1 check ball prevents Driveline pressure from entering the L/R clutch circuit, and provides rapid venting of the L/R clutch when shifted to Neutral.
- The No. 2 check ball prevents Driveline pressure from entering the UD clutch circuit, and provides rapid venting of the UD clutch when shifted to Neutral.
- The No. 3 check ball forces oil applying the Reverse clutch to pass through the R1 orifice (for smooth engagement), but provides rapid venting of the Reverse clutch when it is released.
- The No. 4 check ball prevents drive line-pressure from entering the OD clutch circuit, and provides rapid venting of the OD clutch when shifted to Neutral.

Check Ball Circuit Descriptions (Continued)

- The No. 5 check ball allows oil applying the 2C or 4C clutch to also pass to the solenoid switch valve, while preventing this oil from leaking into the other (released) clutch circuit.
- The No. 6 check ball allows the OD solenoid or MS solenoid (depending on manual valve position) to apply the OD clutch, while preventing the OD apply oil from leaking out of the other solenoid or manual valve.
- The No. 7 check ball allows the 2C solenoid or MS solenoid (depending on manual valve position) to apply the 2C clutch, while preventing the 2C apply oil from leaking out of the other solenoid or manual valve.

AIR PRESSURE TESTING

Air pressure testing can be used to check transmission clutch operation. The test can be conducted with the transmission either in the vehicle or on the work bench.

Using controlled regulated air pressure instead of fluid pressure, the clutch pistons can be tested for leaks by listening for the sound of the air escaping past a piston seal if the seal is leaking. By removing the valve body and using the appropriate port, each clutch piston can be actuated (fig. 12). While applying air pressure to the port, the piston will move and compress the clutch pack. If a seal is leaking, air will be heard leaking past the piston.

Perform the following steps when air pressure testing the clutches:

- Remove the transmission oil pan and valve body (if not already done).
- Apply air pressure to the ports one at a time.

Note: The compressed air supply must be free of all dirt and moisture. Use a pressure not greater than 30 psi or less than 20 psi.

- Listen for the clutch to apply (heard as a slight thud sound). If a large amount of air is heard escaping, the transmission must be removed from the vehicle, disassembled and all seals inspected.

Note: Each RFE clutch includes a bleed orifice, so a small amount of air leakage is normal.

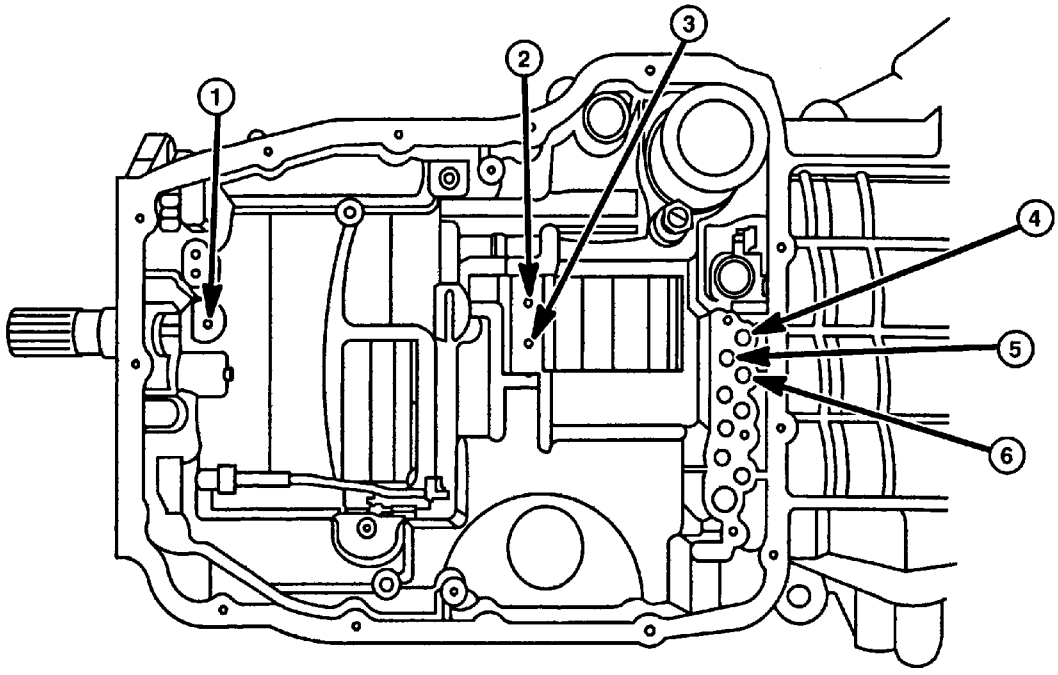

1	Low/Reverse Clutch	4	Overdrive Clutch
2	4C Clutch	5	Underdrive Clutch
3	2C Clutch	6	Reverse Clutch

Figure 12 Clutch Pressure Ports

RFE SERIES MECHANICAL COMPONENTS

Snap Rings

There are 26 snap rings used in the 4WD application 45RFE transmission (27 in the 2WD application). Although some of them look similar, they are not interchangeable. On close inspection, differences can be seen. One example is the Underdrive, Overdrive and Reverse reaction plate snap rings. They are close in diameter, but one is tapered, one is thicker and the third is slightly smaller. A complete listing of all snap rings used in the RFE transmission are found in the last section of this manual. Refer to Appendix A for life-size views of each snap ring during reassembly.

Transmission Front Cover

After the inner and outer snap-ring removal, the transmission front cover is removed by inserting a long blunt tool through the case opening near the valve body. The pump cover's inner and outer seals are glued to the cover. The outer seal is an O-ring which seals against the case bore on the outside diameter. The inner seal is a square-section face seal which seals against a vertical face on the pump housing hub.

The pump cover is easily damaged during removal, so replacement is recommended. The service pump kit and overhaul kit each include a new pump cover (with seals). The individual clutch rebuild kits do not include the pump cover. The pump cover (with seals) is available as a separate service part.

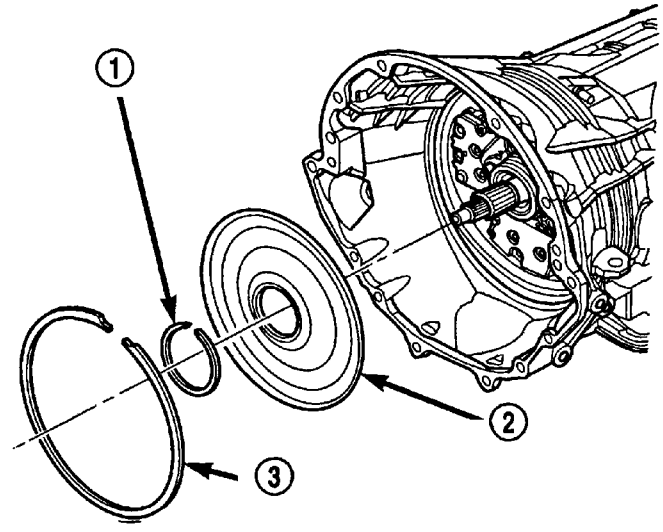

1	Inner Snap Ring	3	Outer Snap Ring
2	Transmission Cover with Seals		

Figure 13 Transmission Front Cover

Oil Pump

The oil pump is attached to the front of the transmission case by six bolts. In the event that the oil pump and only the oil pump is being removed, it is important to hold inward on the input shaft during oil pump removal to prevent pulling the input shaft forward and allowing the numbers 2, 3 and/or 4 bearings to dislodge and fall out of alignment. If the condition of the numbers 2, 3 and/or 4 bearings do become dislodged, this condition will be revealed during an input shaft end play check which is below specification (smaller gap). Bearings that have dropped out of position will cause transmission failure.

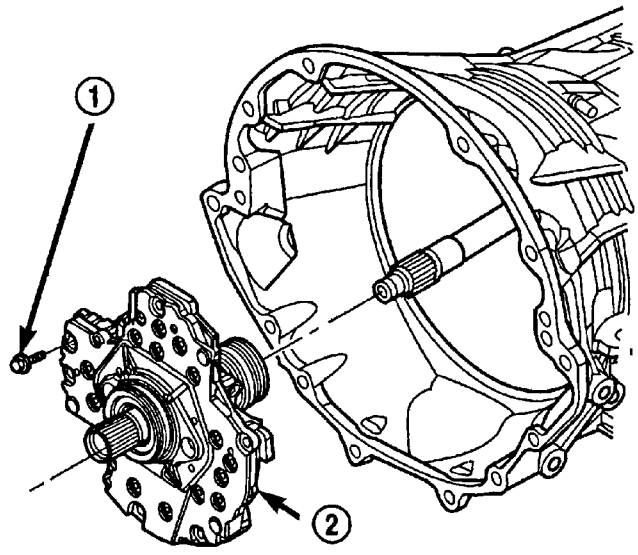

1	Oil Pump-to-Case Bolt	2	Oil Pump Assembly

Figure 14 Transmission Oil Pump

Input Clutch Assembly

With the oil pump removed, the input clutch assembly can be removed by pulling straight out. As the input clutch assembly is removed, the selective thrust plate is revealed, item No. 2 in the illustration below. This selective plate is used to adjust the input shaft end play. Also note the orientation of bearings No. 1 and No. 5. These bearings will fail prematurely if installed backward.

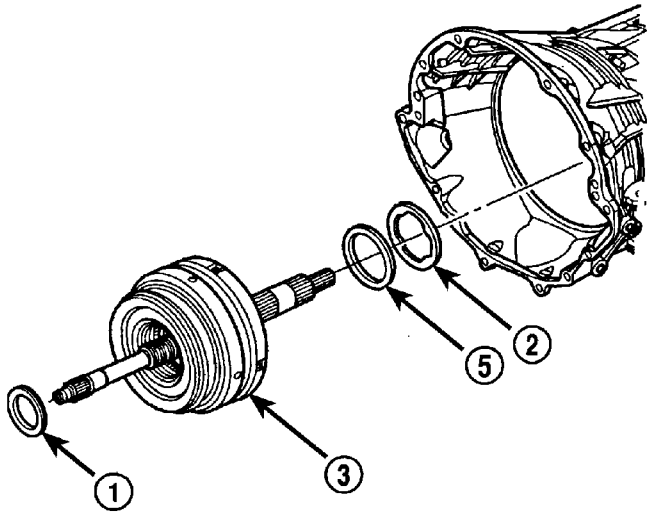

1	Bearing No. 1	3	Input Clutch Assembly
2	Thrust Plate (Selective)	5	Bearing No. 5

Figure 15 Input Clutch Assembly

2C/4C Bulkhead

The center bulkhead is held in place using a tapered snap ring. Note that the tapered side must face forward and the painted side (if visible) must face the rear of the transmission case. Note also the position of the snap ring ends with respect to the case openings. Incorrectly positioned snap ring ends can interfere with the valve body. As the 4C bulkhead is removed, observe the orientation of the oil feed holes and where they should be positioned against the valve body. If the bulkhead is not installed correctly, a delayed or no 2nd gear or 4th gear shift may result.

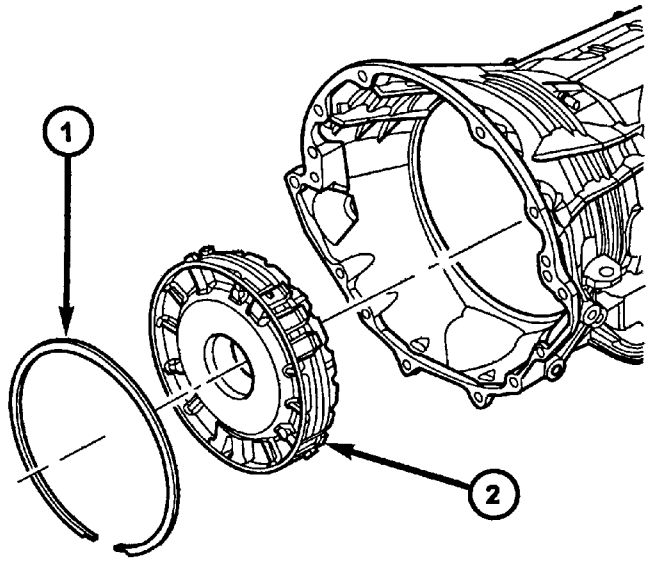

1	Snap Ring (Tapered)	2	4C Clutch Retainer/Bulkhead

Figure 16 2C/4C Clutch Retainer/Bulkhead

2C Clutch Pack

After removal of the center bulkheads rear snap ring, the 2C clutch pack can be accessed and removed. Note the order of the reaction plate to the steel plates and fiber clutch discs. Failure to install these parts in the correct order will result in transmission failure.

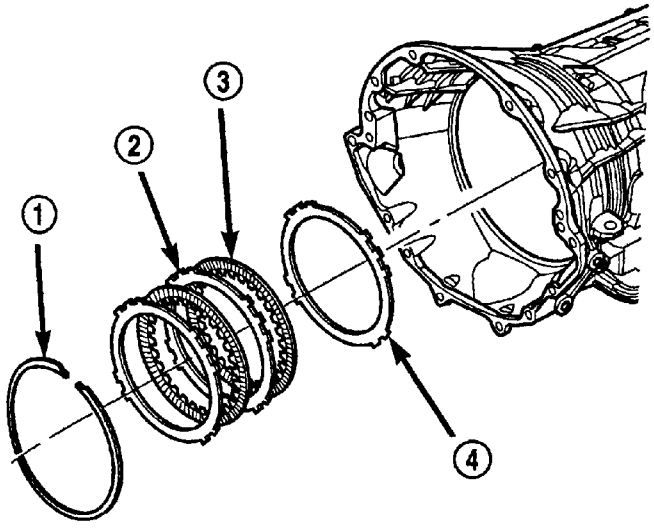

1	Center Bulkhead Rear Snap Ring	3	Friction Disc
2	Steel Plate	4	Reaction Plate (Thick)

Figure 17 2C Clutch Pack

Reaction Gear Set

Remove the reaction annulus and carrier, and then separate the No. 6 bearing and the thrust plate from within the annulus hub. The thrust plate is selective and is used to adjust the output shaft end play. Also note the orientation of bearings Nos. 7, 8 and 9 as they are removed. It is critical that these bearings be assembled in the correct orientation at reassembly.

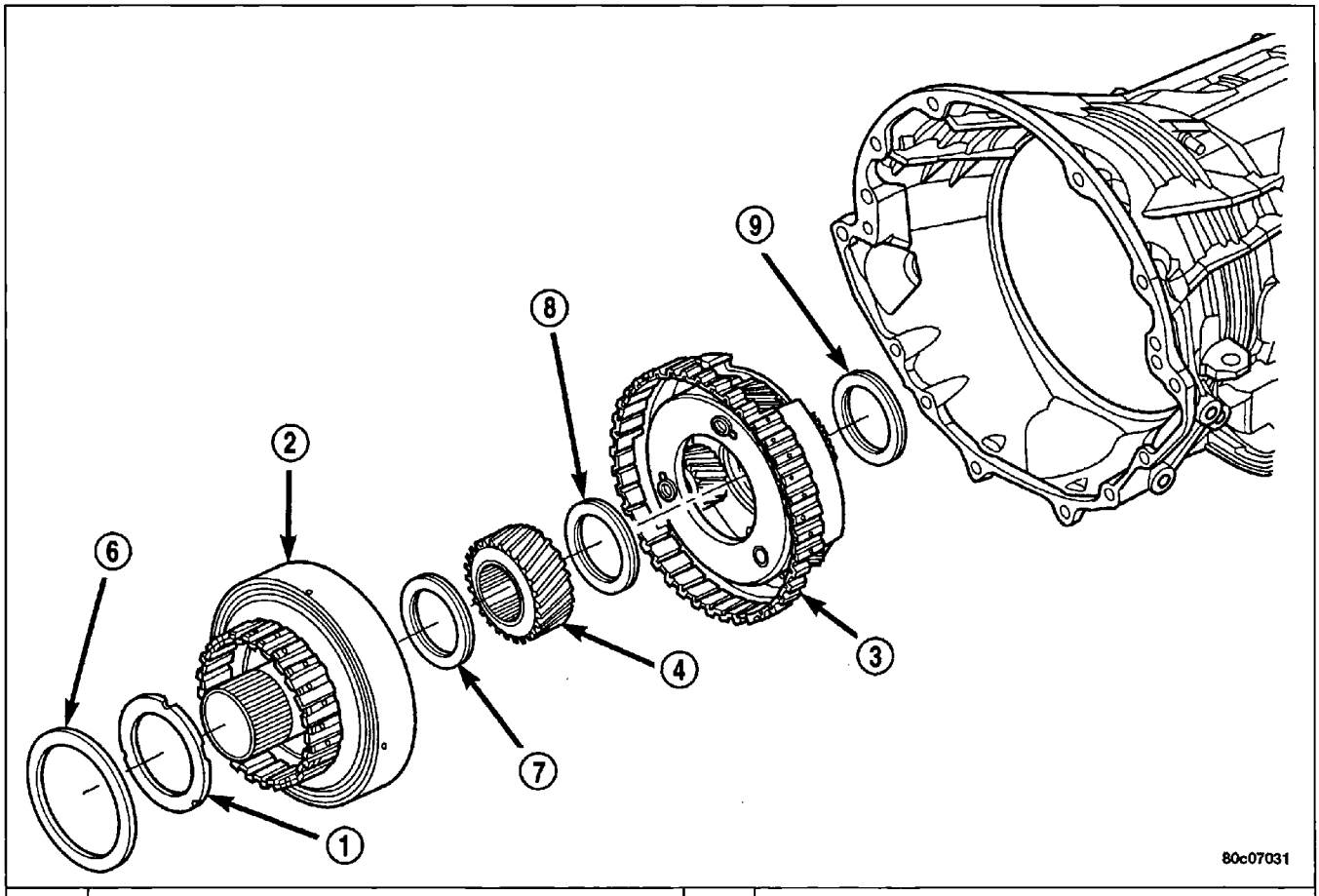

1	Thrust Plate (Select)	6	Bearing No. 6
2	Reaction Annulus Gear	7	Bearing No. 7
3	Reaction Planetary Carrier	8	Reaction Annulus Bearing No. 8
4	Reaction Sun Gear	9	Bearing No. 9

Figure 18 Reaction Annulus and Carrier

Input/Reverse Planetary Assembly

The remaining portion of the planetary assembly is the input/reverse gear set. As the gear set is removed, recover the No. 9 and No. 12 bearings. Note the orientation of these bearings.

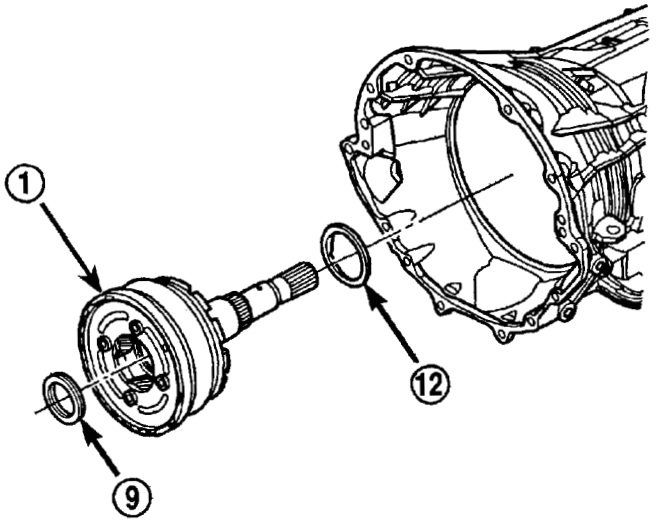

1	Input/Reverse Planetary Assembly	12	Bearing No. 12
9	Bearing No. 9		

Figure 19 Input/Reverse Planetary Assembly

Low/Reverse Clutch

Remove the low/reverse snap ring and remove the L/R clutch retainer from the transmission case. As the L/R retainer is removed, note the orientation of its oil feed hole to the case. If the clutch retainer orientation is not correct, a delayed engagement or no low or reverse gear may result.

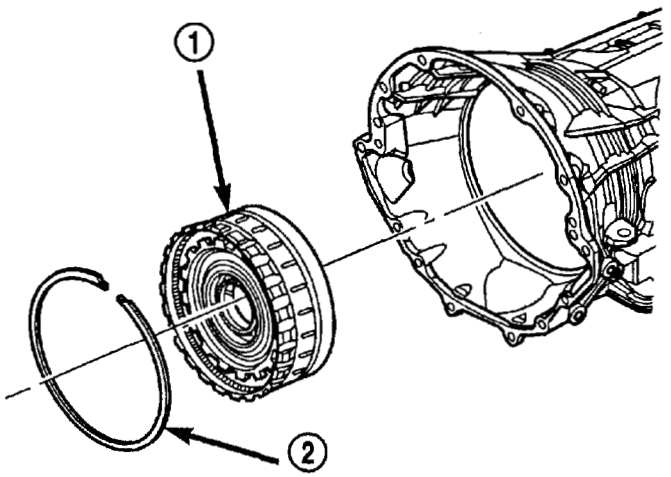

1	Low/Reverse Overrunning Clutch Assembly	2	Tapered Snap Ring

Figure 20 Low/Reverse Clutch Retainer

Park Sprag Gear

The park sprag gear is located on the output shaft. When Park position is selected, the park pawl is engaged with the park sprag gear to lock the transmission output shaft from turning.

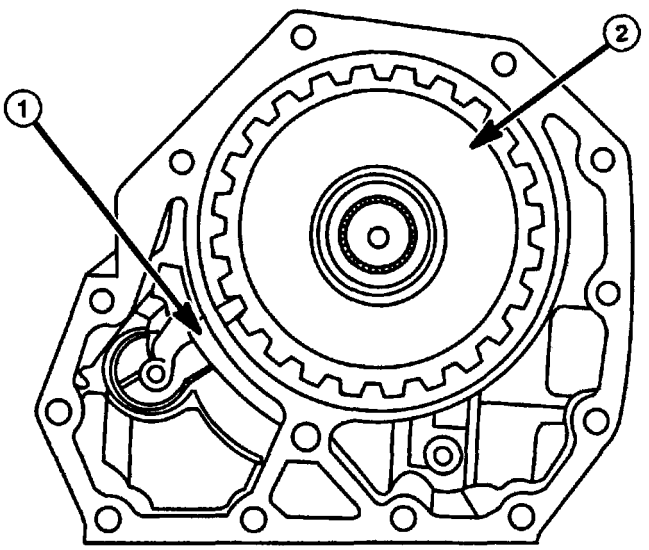

1	Park Pawl	2	Park Sprag Gear

Figure 21 Park Sprag Gear

Notes:

MODULE 3 MAJOR COMPONENT SERVICE AND REASSEMBLY

OIL PUMP

The oil pump assembly includes the pump housing, pump valve body and reaction shaft support. The pump housing contains two driven gears (primary and secondary), that are driven by the torque converter hub through a central drive gear. All three gears are select fit and are serviced only in the complete pump assembly. Mark the location of each driven gear during removal to ensure they are properly reinstalled in the original location during reassembly. Gears should always be lubricated with Mopar® ATF+4 when overhauling.

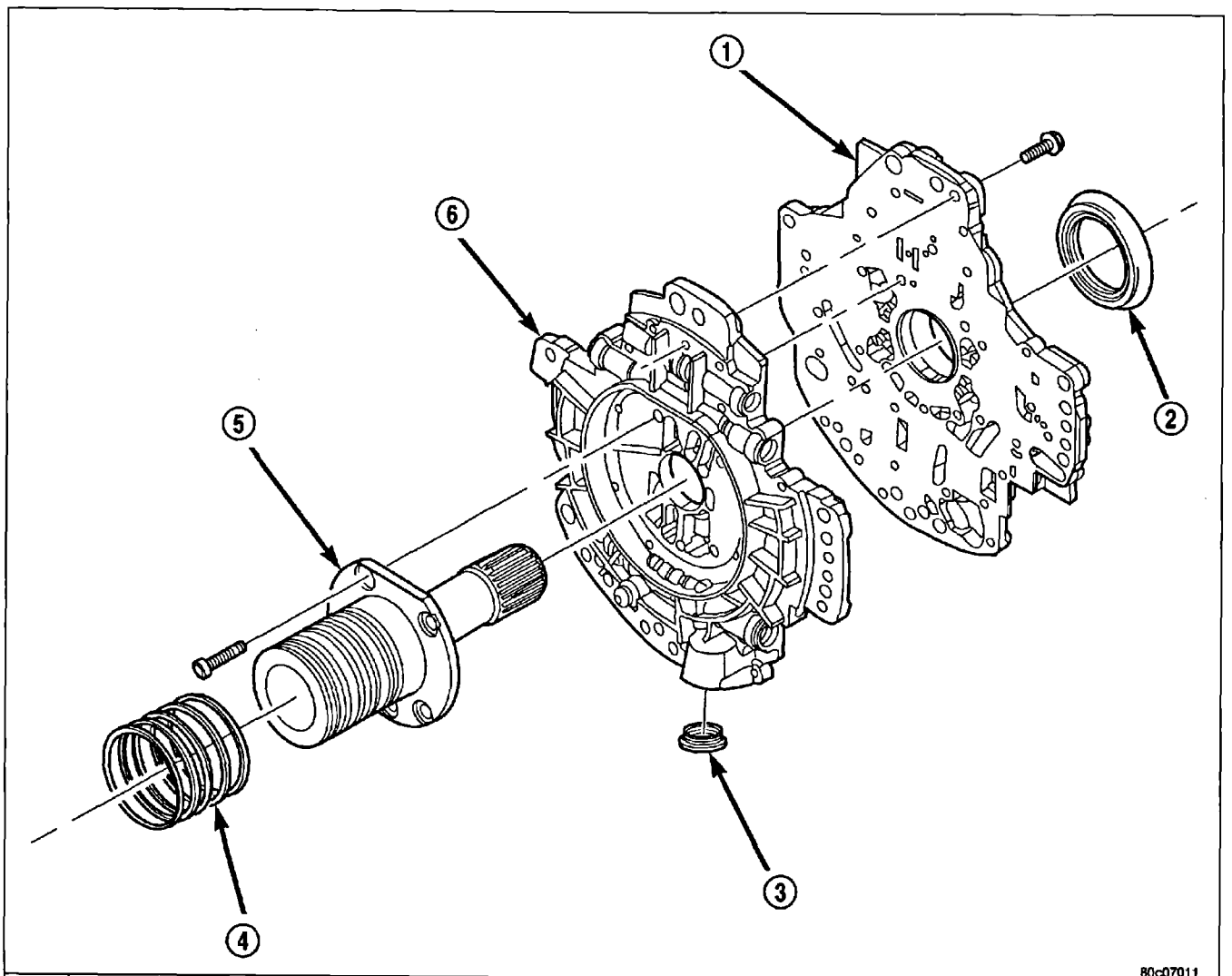

1	Pump Housing	4	Seal Ring (5)
2	Impeller Hub Seal	5	Reaction Shaft Support
3	Oil Filter Seal	6	Pump Valve Body

Figure 22 Oil Pump Assembly

When the pump gears rotate, the separating gear teeth create a low pressure area between the teeth and atmospheric pressure in the oil sump forces the oil through the filter to fill this low pressure area.

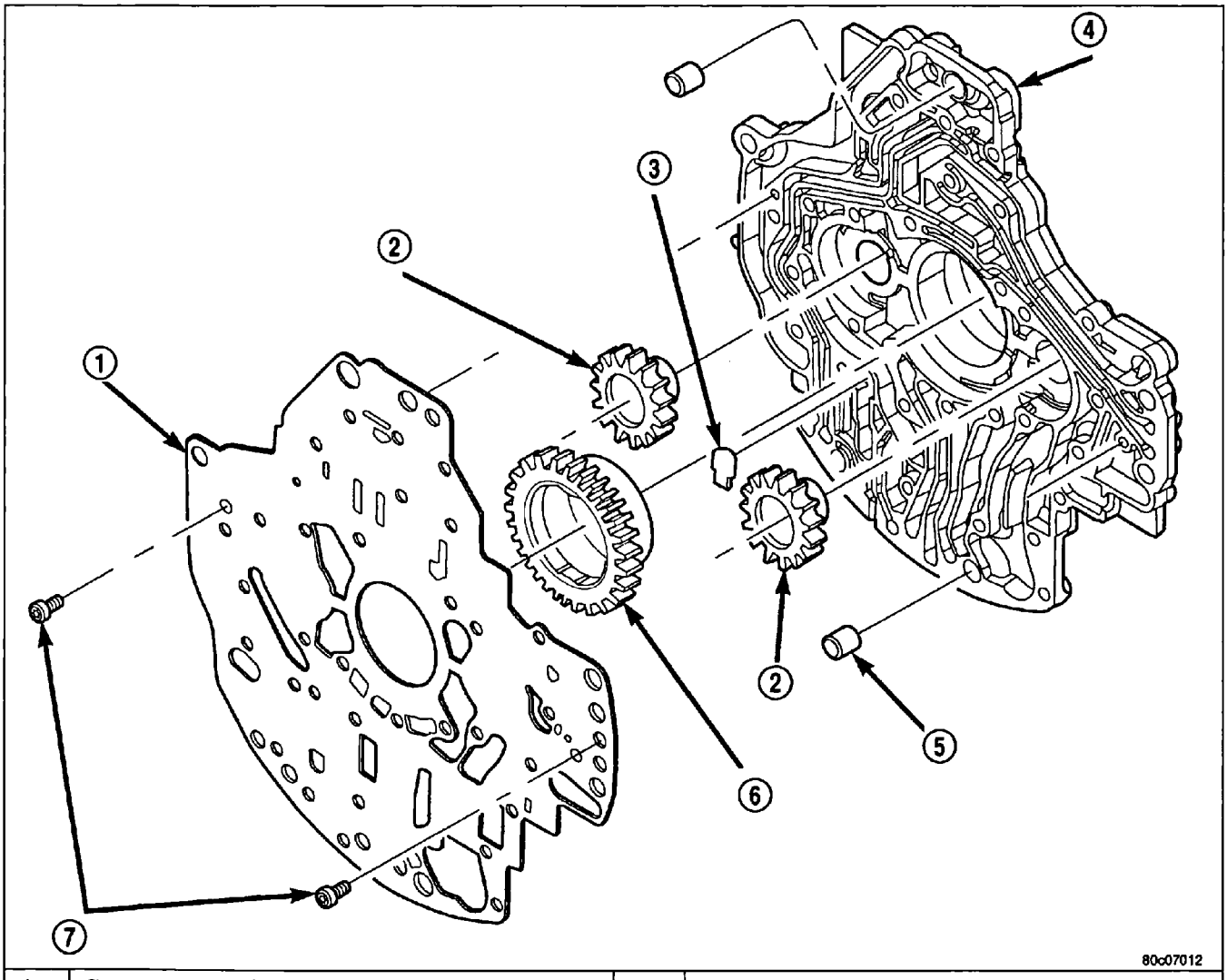

1	Separator Plate	5	Dowel (2)
2	Driven Gear (2)	6	Drive Gear
3	Check Valve	7	Screws
4	Pump Housing		

Figure 23 Pump Housing and Gears

As the gears rotate and the teeth clearance is reduced, pressurized fluid is forced into the pump outlet and to the valves in the oil pump. At low speeds, both driven gears supply fluid to the transmission. As speed increases, flow from the primary driven gear becomes sufficient to meet the transmission fluid system demand and flow from the secondary driven gear is recirculated through the main pressure regulator valve. Once secondary flow is recirculated, the check valve located between the pump outlets closes and the primary driven gear supplies all the fluid to the transmission.

Located inside the transmission oil pump valve body are valves used to control or limit hydraulic pressure in the transmission and torque converter.

The main pressure regulator valve controls line pressure. In case of a Limp-In condition, the pressure regulator valve sets line pressure to its maximum value.

The torque converter limit valve is needed to regulate fluid pressure to the torque converter.

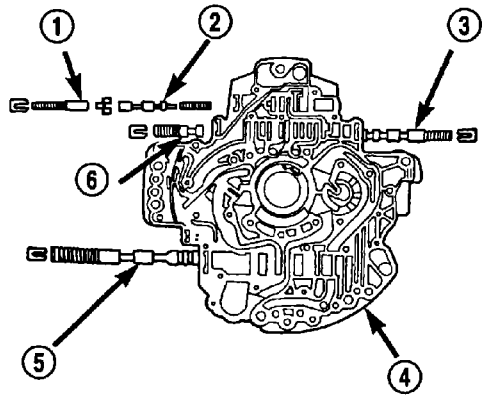

1	TCC Clutch Accumulator Piston	4	Pump Valve Body
2	TCC Regulator Valve	5	Pressure Regulator Valve
3	TCC Clutch Switch Valve	6	TCC Limit Valve

Figure 24 Oil Pump Valve Body

As the oil pump valve body and the pump housing are separated, note that the pump is held in alignment by two dowel pins, one at the top and one at the bottom. These dowel pins aid in maintaining proper alignment of the pump valve body and housing during reassembly. The dowels also align the separator plate.

As the oil pump valves are removed from the valve body, they should be inspected for scratches, nicks, burrs or scores. Check each valve for stickiness or binding by tipping the valve body back and forth and observing whether the valve will slide back and forth in its bore under its own weight (without pushing, prying, tapping, etc.). Sticky valves and their bores can be cleaned; but if cleaning does not correct the stickiness, the pump assembly must be replaced.

OIL PUMP FAILURE ANALYSIS

Pump Drain-Back Hole

In the following example, the oil pump housing drain-back hole was not drilled through. This causes pressure to build within the transmission to the point that the pump seal is forced outward and begins to leak.

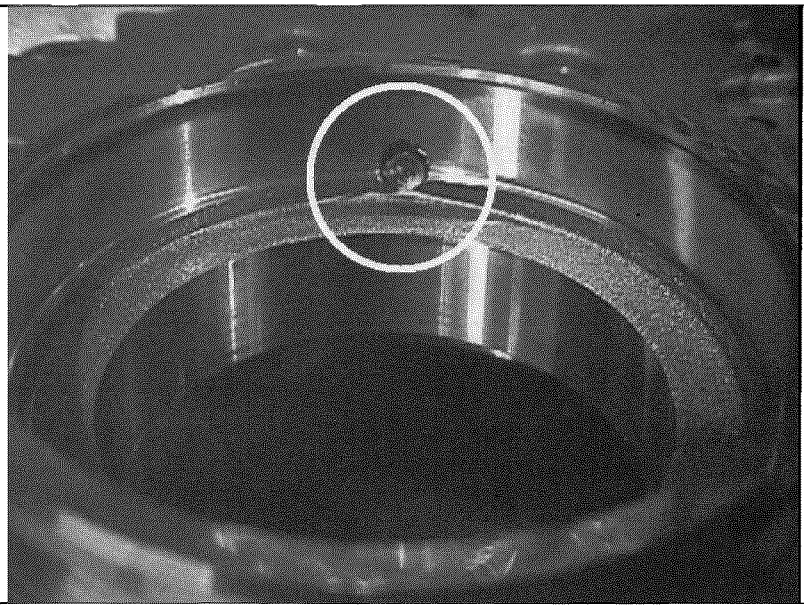

Figure 25 Oil Pump Drain-Back Hole Not Drilled Through

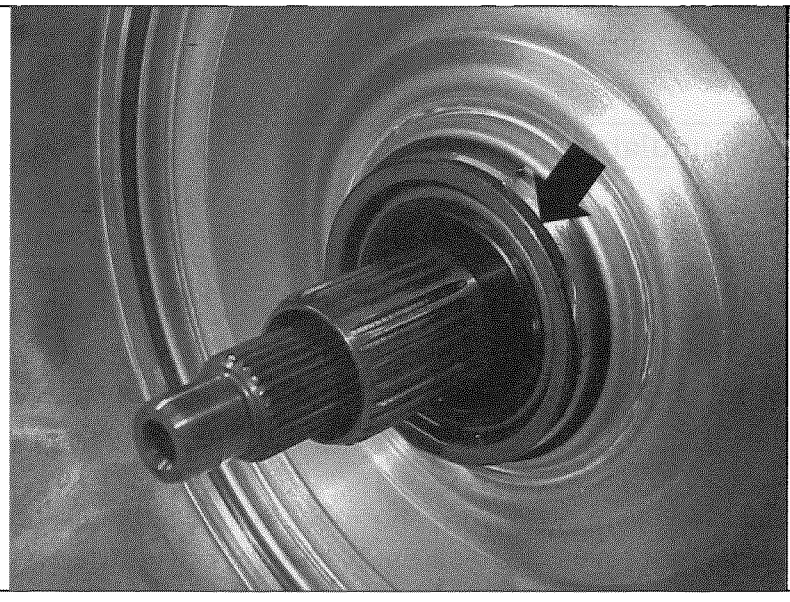

Figure 26 Seal Pushed Out

Oil Pump Porosity

In the example below, the oil pump housing casting illustrates conditions of porosity that provide a leak path from the driven gear bore to the outside of the hub, just beyond the face where the inner pump cover seal sits. This type of porosity will produce a slow leak through the housing. There is no repair for porosity; the pump assembly must be replaced.

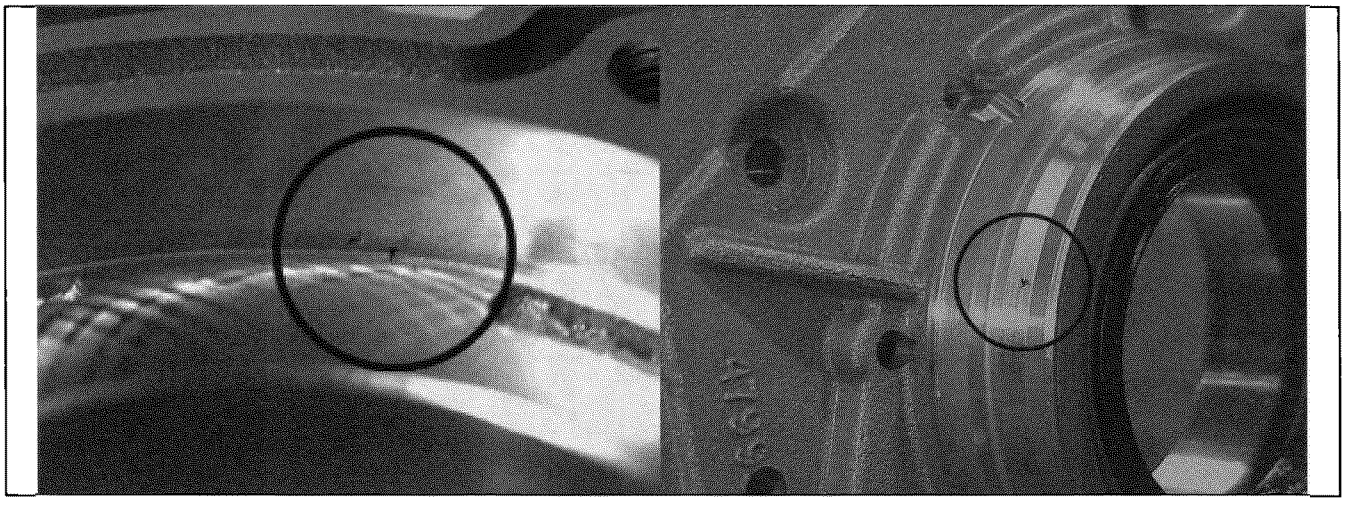

Figure 27 Porous Pump Housing

Transmission Front Cover Snap Ring

The pump cover inner snap ring is not positioned correctly in the snap ring groove. This will cause a leak at the front cover inner seal. Use the correct special tool No. 8255 to seat the snap ring in the groove.

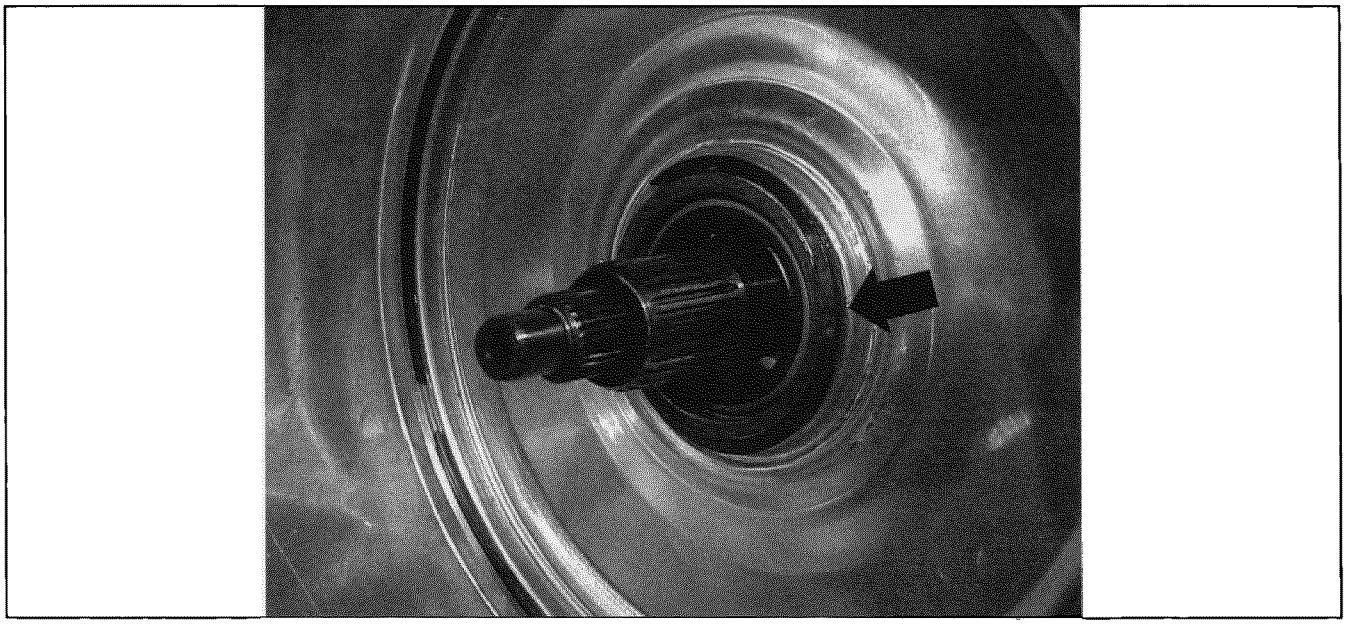

Figure 28 Front Cover Snap Ring

Casting Flaws

In both examples below, the casting wall was not high enough and after machining, created a leak path to transfer fluid from one passageway to the other. This caused fluid to escape out of the vent or leak to the outside of the casting.

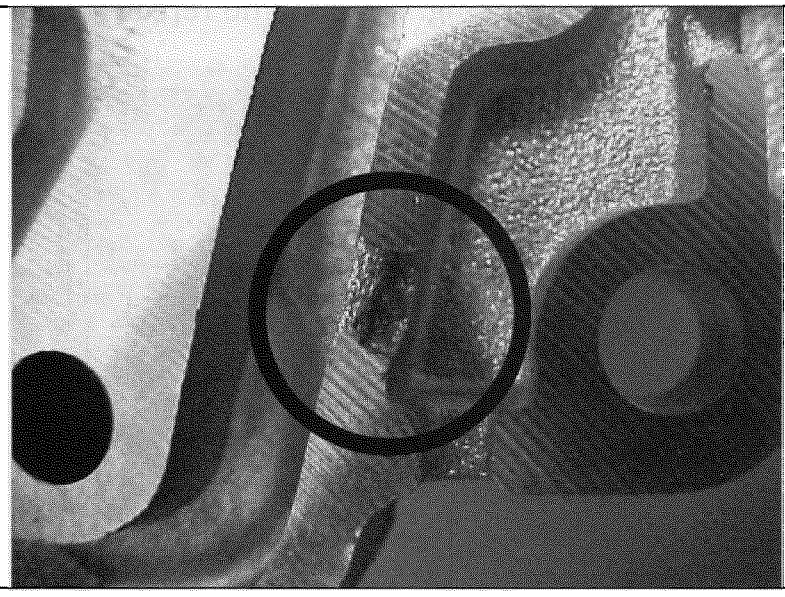

Figure 29 Casting Flaw in Pump Housing

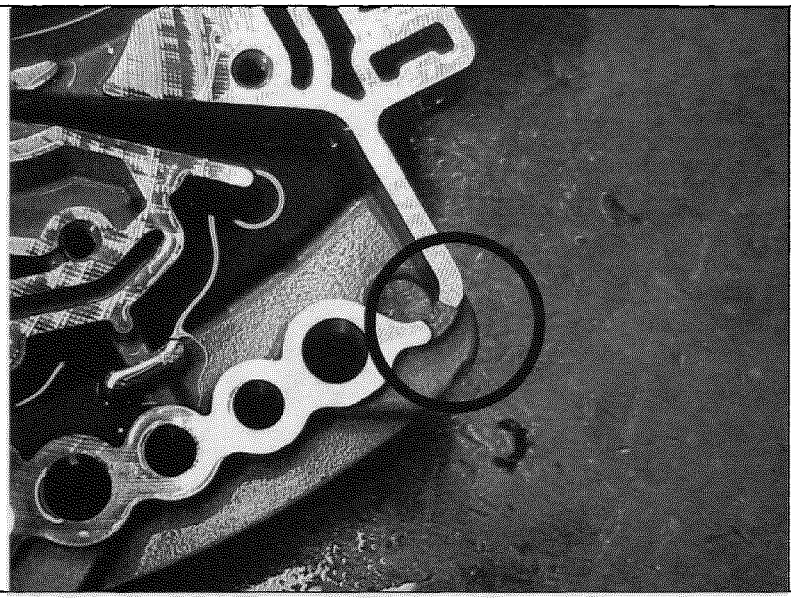

Figure 30 Casting Flaw in Pump Valve Body

Notes:

Notes:

HYDRAULICALLY APPLIED CLUTCHES

The RFE series uses six hydraulically applied clutch assemblies. Starting at the front and ending in the rear of the transmission, the clutch assemblies are:

- Underdrive Clutch
- Overdrive Clutch
- Reverse Clutch
- 4th Clutch (4C)
- 2nd Clutch (2C)
- L/R Clutch

A hydraulically actuated clutch is applied or released when the TCM commands an electronic solenoid to turn on or off. Some solenoids normally vented when de-energized, while others are normally applied when de-energized. When the solenoid is in the applied position, fluid is routed to the clutch assembly and the clutch is applied to obtain the required gear.

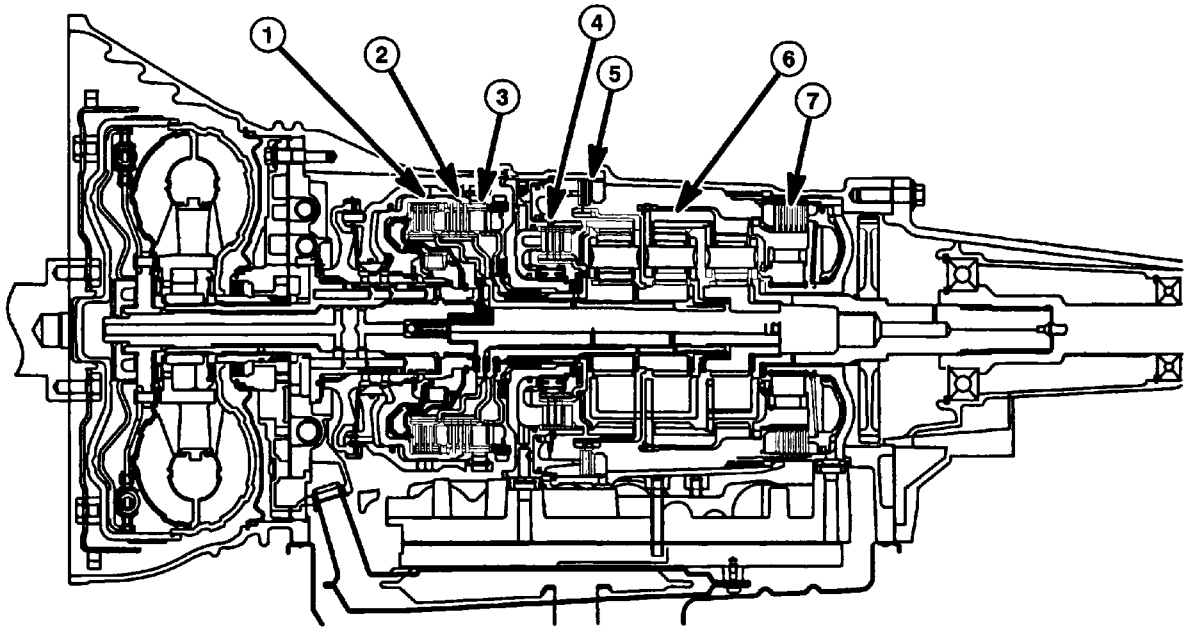

1	Underdrive Clutch	5	2C Clutch
2	Overdrive Clutch	6	Planetary Gears
3	Reverse Clutch	7	Low Reverse Clutch
4	4C Clutch		

Figure 31 Hydraulically Applied Clutches

INPUT CLUTCH ASSEMBLY

Underdrive Clutch

The UD clutch consists of four separator plates and four clutch discs. The UD clutch is hydraulically applied in First, Second, Second Prime and Third (direct) gears by pressurized fluid against the UD piston. When the UD clutch is applied, the UD hub drives the input (rear) sun gear.

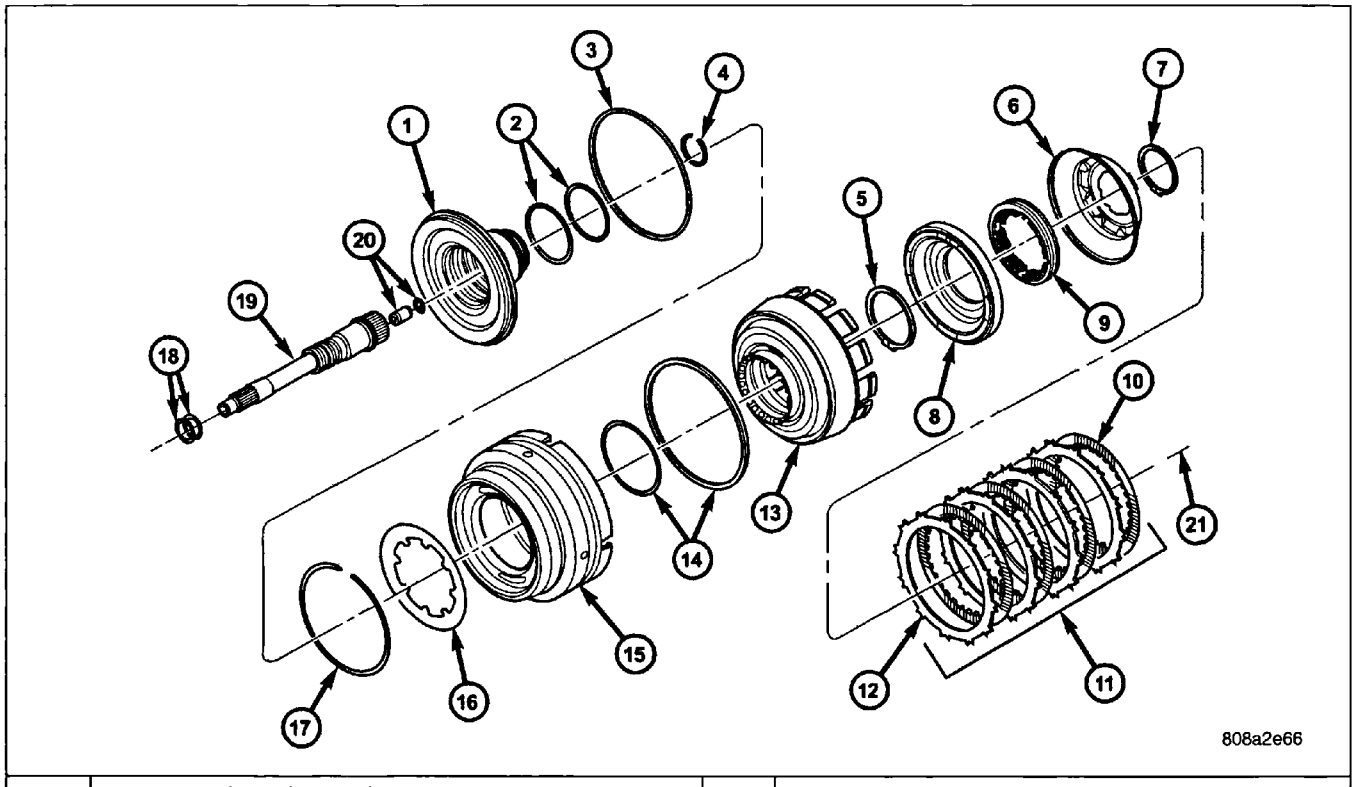

1	Input Clutch Hub	12	Plate
2	O-Ring Seals	13	Input Clutch Retainer
3	Seal	14	Seal
4	Snap Ring (Input Shaft)	15	OD/REV Piston
5	Snap Ring (Tapered)	16	Belleville Spring
6	UD Balance Piston	17	Snap Ring (Flat)
7	Balance Piston Tru Arc Snap Ring	18	Seal Rings
8	UD Piston	19	Input Shaft
9	UD Return Spring Pack	20	Lube Check Valve and Snap Ring
10	Disc	21	Continued on next Figure
11	UD Clutch		

Figure 32 Input Clutch Assembly (Part 1)

Overdrive and Reverse Clutch

The OD clutch consists of four clutch discs and three separator plates while the reverse clutch has two clutch discs and one separator plate. The OD clutch is hydraulically applied in Third (direct), Fourth and Fifth gears by pressurized fluid between the overdrive/reverse piston and the input clutch retainer. When the OD clutch is applied, the OD hub drives the reverse carrier/input annulus assembly and the reaction sun gear.

The reverse clutch is hydraulically applied in Reverse gear by pressurized fluid between the input clutch hub and the overdrive/reverse piston. When the reverse clutch is applied, the reaction annulus gear is driven.

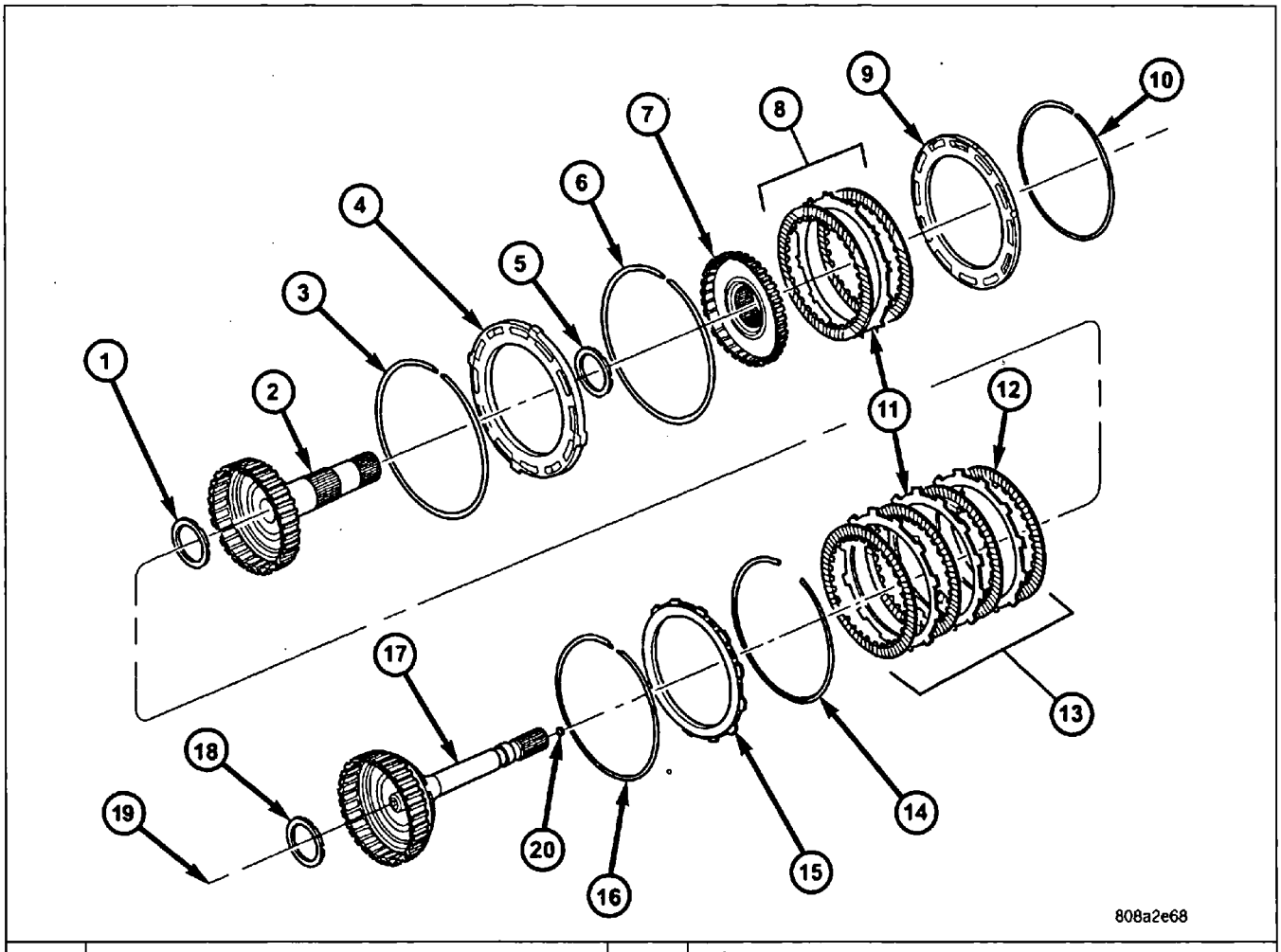

1	Bearing No. 3	11	Plate
2	OD Hub/Shaft	12	Disc
3	Snap Ring (Wave)	13	OD Clutch
4	Rev/OD Pressure Plate	14	UD/OD Reaction Plate (Lower) Snap Ring (Tapered)
5	Bearing No. 4	15	UD/OD Reaction Plate
6	Snap Ring (Flat)	16	UD/OD Reaction Plate (Upper) Snap Ring (Flat)
7	Reverse Hub/Shaft	17	UD Hub/Shaft
8	Reverse Clutch	18	Bearing No. 2
9	Reverse Reaction Plate	19	Continued from previous Figure
10	Snap Ring (Selective)	20	Orifice Plug

Figure 33 Input Clutch Assembly (Part 2)

The No. 5 bearing and thrust plate are located between the reverse clutch hub and the center bulkhead. These components snap fit together and are very important as they control input shaft end play.

The input clutch assembly contains the Nos. 2, 3 and 4 bearings. These bearings can all be damaged if the input shaft is not held in position when servicing the oil pump. If the input shaft is not held in place while removing the oil pump, the bearings can drop out of position and can be damaged upon oil pump installation. The photo below shows damage to the No. 2 bearing caused by oil pump service where the input shaft was not held in position.

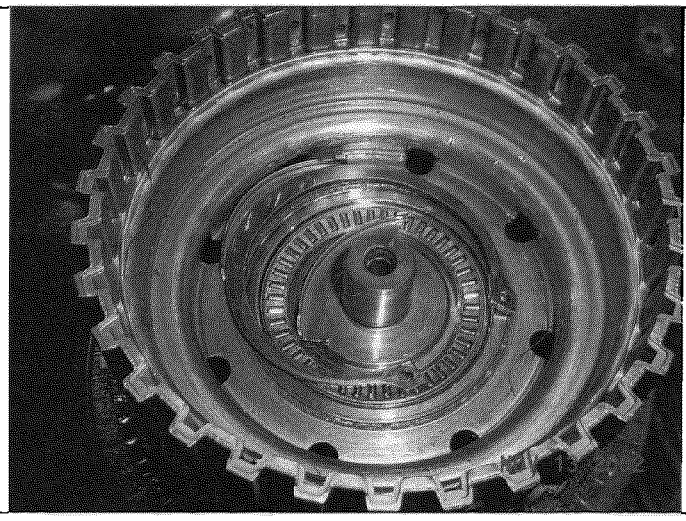

Figure 34 No. 2 Bearing Failure

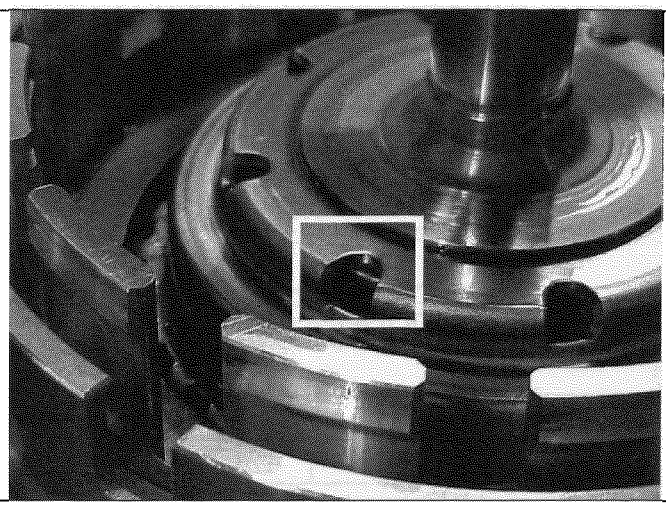

Figure 35 No. 2 Bearing Out of Position

As the input clutch packs (UD, OD and Reverse) are disassembled, it is important to note the difference between the steel plates and friction discs of the various clutches. The OD friction discs and steel discs are thicker and are colored different than the matching components in the UD and reverse clutches.

Clutch Disc/Plate Identification

Overdrive Clutch

- Three steel plates (steel plates have straight tabs) and four friction discs (friction discs have a radial grooved pattern)

Underdrive Clutch

- Four steel plates (steel plates have scalloped or notched tabs) and four friction discs (friction discs have a slanted 90-degree [perpendicular] pattern)

Reverse Clutch

- One steel plate (steel plate has scalloped or notched tabs) and two friction discs (friction discs are dark gray [black] in color with a slanted 90-degree [perpendicular] pattern)

Input Clutch Disassembly

Disassembly of the UD/OD clutch requires spring compressor tool 8251 to compress the UD return spring pack to allow removal of the input clutch hub snap ring. Use the service information for detailed instructions on clutch disassembly.

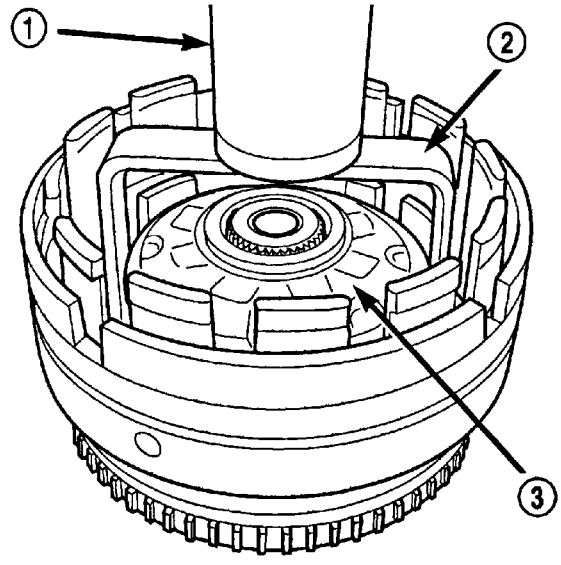

80c07426

1	Press Arbor	3	Balance Piston
2	Tool 8251		

Figure 36 Compressing UD/OD Balance Piston

Input Clutch Reassembly

As the input clutch retainer (tapered) snap ring is installed into the input clutch assembly, it is important to note that the tapered side must face up. The Underdrive piston requires the use of tools 8504-1 and 8504-2 to guide the piston inner and outer seals into position in the input clutch retainer and hub. The UD/OD balance piston requires the use of tool 8252 to install it into position in the Underdrive piston. Tool 8251 is once again used to compress the UD return spring pack through the balance piston to allow the installation of the snap ring (flat) onto the input clutch hub.

Install the UD clutch pack, starting with a steel separator plate against the piston. The flat snap ring is installed under the reaction plate, and the reaction plate is installed with the outside lugs toward the top. The tapered snap ring must be installed such that both ends of the ring are hidden underneath the retainer teeth, not visible in the space between the teeth.

A running change during the 2002 model year widened the tapered snap ring by 1 mm, while the reaction plate lugs were simultaneously made slightly thinner to allow the new tapered ring to fully seat in the retainer groove. If the tapered snap ring is replaced with a wide ring, the reaction plate should also be replaced (with the latest part). No portion of the tapered snap ring ID should protrude past the inner edge of the clutch retainer teeth.

Input Clutch Roller Thrust Bearings

The following illustration shows the correct orientation of the three roller thrust bearings (No. 2, No. 3 and No. 4) contained within the input clutch assembly. Retain bearings using Vaseline® or Trans-Gel.

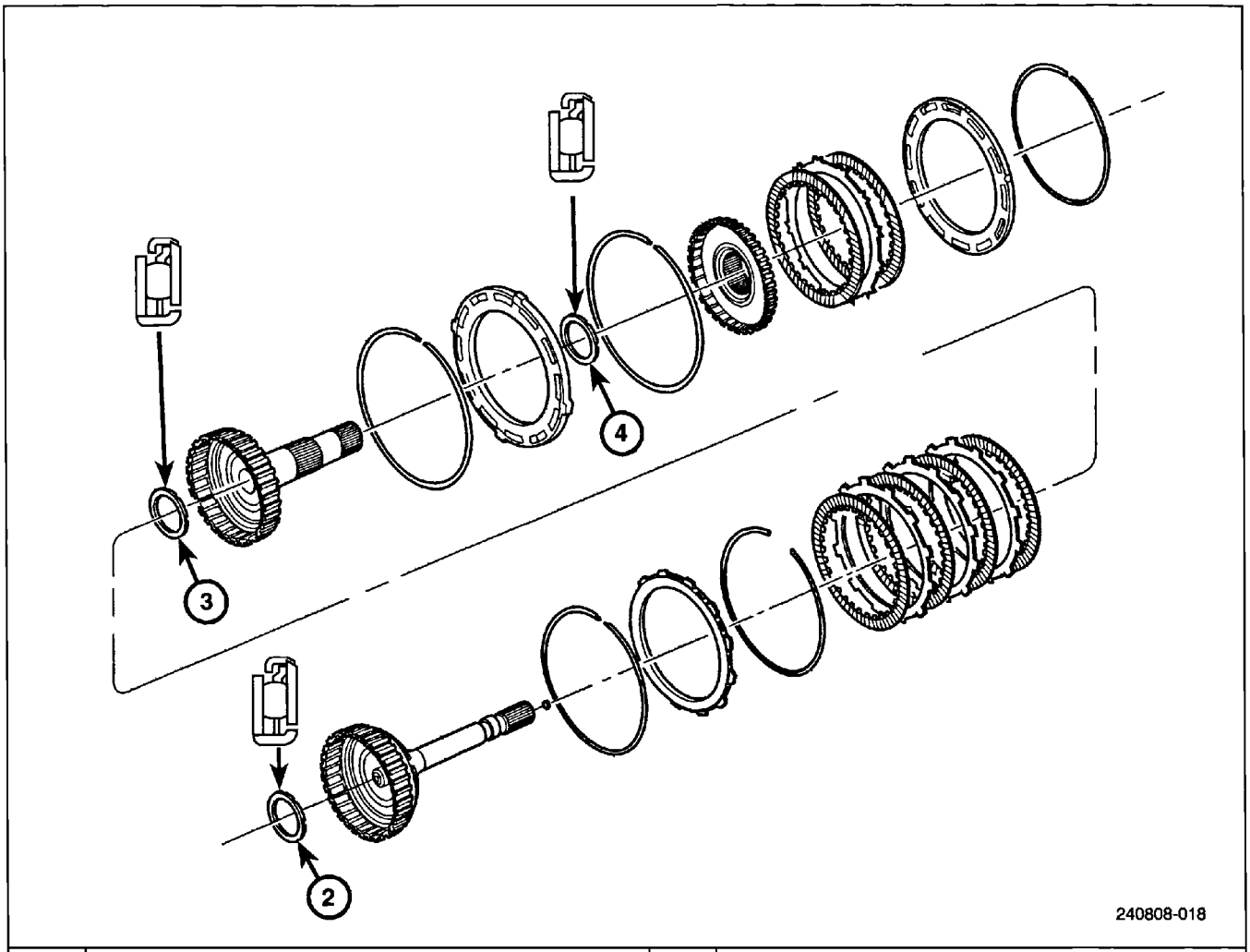

2	Bearing No. 2	4	Bearing No. 4
3	Bearing No. 3		

Figure 37 Input Clutch Assembly Roller Thrust Bearings

Underdrive Clutch Clearance Check

With the Underdrive piston, clutch pack and reaction plate installed, position the input clutch assembly onto the input clutch pressure fixture 8260, mount a dial indicator onto the hub and zero the needle of the indicator on the clutch discs. With 20 psi pressure applied to fixture 8260, measure clutch clearance. Clearance must be measured in four places 90 degrees apart. Clearances that are not within specification require replacement of the UD reaction plate and all friction discs and steel plates, as the reaction plate is no longer selective.

Overdrive Clutch Clearance Check

With the Underdrive piston, clutch pack and reaction plate along with the overdrive clutch pack and associated OD/Reverse pressure plate installed, position the input clutch assembly onto the input clutch pressure fixture 8260. Mount a dial indicator onto the hub and zero the needle of the indicator on the pressure plate as shown in the illustration below. With 20 psi pressure applied to fixture 8260, check clutch clearance. Clearances that are not within specification require replacement of the reaction plate and all friction discs and steel plates, as the reaction plate is not selective.

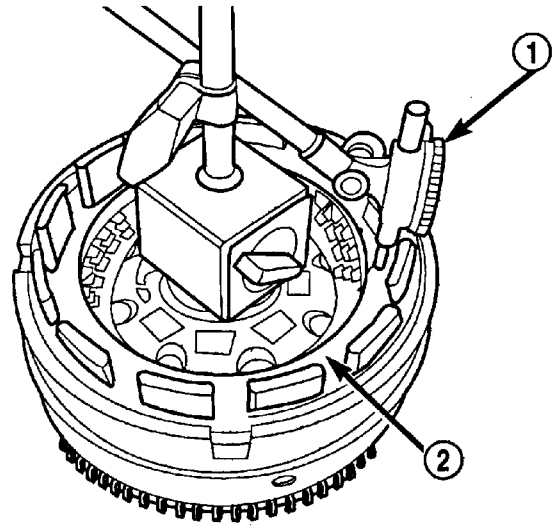

1	Tool C-3339	2	OD/UD Reaction Plate

Figure 38 Measuring OD Clutch Clearance

Piston and Balance Piston Seals

The UD piston and the UD balance piston both have permanent seals. Any damage to the UD piston or UD balance piston requires replacement. UD piston and UD balance piston are included with transmission overhaul kits. All other pistons have seals or O-rings that are replaceable and also are included with transmission overhaul kits.

Reverse Clutch

With both the Underdrive and Overdrive clutch packs installed and clearance measured, install the reverse clutch pack with the reverse reaction plate and selective snap ring. Position the input clutch assembly onto the input clutch pressure fixture 8260. Mount a dial indicator onto the hub and zero the needle of the indicator on the clutch discs as shown in the illustration below. With 20 psi pressure applied to fixture 8260, check the clutch clearance. Clearances that are not within specification require replacement of the selective snap ring.

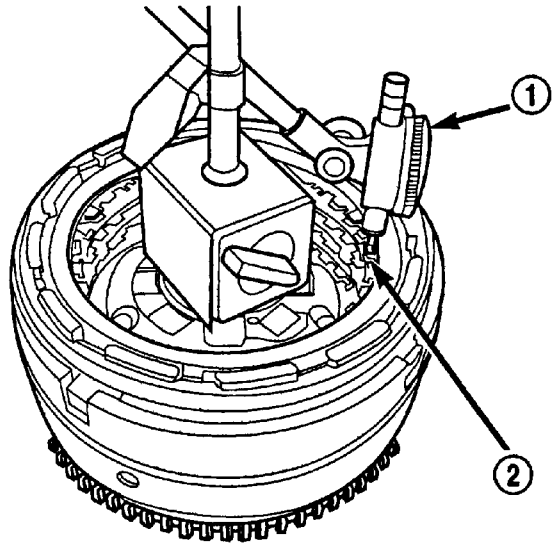

1	Tool C-3339	2	Reverse Clutch Pack

Figure 39 Measuring Reverse Clutch Clearance

POWERFLOW

The 45RFE has four forward gears: First, Second, Second Prime, Third and Fourth. The 545RFE has all the same forward gears as the 45RFE with an additional fifth gear that has an overdrive ratio of 0.67:1. The RFE series is considered as either a 4- or 5-speed automatic transmission. Either second or 2nd prime may be used for second gear, depending on certain conditions. Second gear is used during most upshifts and downshifts and Second Prime gear is used for 4–2 or high-speed 3–2 heavy throttle downshifts. All gear ratios in the RFE series are achieved by applying two clutches simultaneously. During a shift, one clutch is released and another is applied resulting in a different gear ratio. The following chart shows clutch apply for each requested gear.

Table 1 Clutch-to-Clutch Application Chart

Shift Lever Position	Gear	Park Sprag	CLUTCHES APPLIED						
			Input			Holding			
			Under-drive	Over-drive	Rev.	2C	4C	Low Reverse	Over-running
P —	Park	E						A	N/A
R —	Reverse				A			A	N/A
N —	Neutral							A	N/A
D —	First		A					A*	H
	Second		A			A			OR
	Third		A	A					OR
	Fourth			A			A		OR
	Fifth			A		A			OR
	Second Prime		A				A		OR
	Limp-In (3rd)		A	A					OR
2 —	First		A					A *	H
	Second		A			A			OR
	Limp-In (2nd)		A			A			OR
1 —	Low		A					A	H

E = Engaged

H = Holding

A = Applied

OR = Overrunning

* Low Reverse Clutch is ON continuously in Manual Low. When the gear selector is in Overdrive and Manual 2, the LR clutch is ON in 1st gear until output speed reaches 150 rpm. On deceleration, with the gear selector in OD or manual 2 the L/R clutch is reapplied when output rpm reaches 100.

GEAR TRAIN APPLICATION CHART

Shift Lever Position	Gear	Applied Input Clutch	Driven Planetary Member	Applied Holding Clutch	Held Planetary Member
P —	Park			L/R	Input Annulus
R —	Reverse	Reverse	Reaction Annulus	L/R	Input Annulus
N —	Neutral			L/R	Input Annulus
D —	First	UD	Input Sun Gear	L/R and Over-running Clutch	Input Annulus
	Second	UD	Input Sun Gear	2C	Reverse Sun Gear
	Third	UD/OD	Input Sun Gear/Input Annulus		
	Fourth	OD	Reverse Carrier/ Reaction Sun Gear	4C	Reaction Annulus
	Fifth	OD	Reverse Carrier	2C	Reverse Sun Gear
	Second Prime	UD	Input Sun Gear	4C	Reaction Annulus
	Limp-In (3rd)	UD/OD	Input Sun Gear/Input Annulus		
2 —	First	UD	Input Sun Gear	L/R and Over-running Clutch	Input Carrier
	Second	UD	Input Sun Gear	2C	Reverse Sun Gear
	Limp-In (2nd)	UD	Input Sun Gear	2C	Reverse Sun Gear
1 —	First	UD	Input Sun Gear	L/R	Input Annulus
	Limp-In (2nd)	UD	Input Sun Gear	2C	Reverse Sun Gear

Notes:

Notes:

HOLDING CLUTCHES

2C and 4C Clutches

The 2C clutch is hydraulically applied in Second and Fifth gears by pressurized fluid against the 2C piston. When the 2C clutch is applied, the reaction planetary carrier/reverse sun gear assembly is held or grounded to the transmission case.

The 4C clutch is hydraulically applied in Second Prime and Fourth gear by pressurized fluid against the 4C clutch piston. When the 4C clutch is applied, the reaction annulus gear is held or grounded to the transmission case.

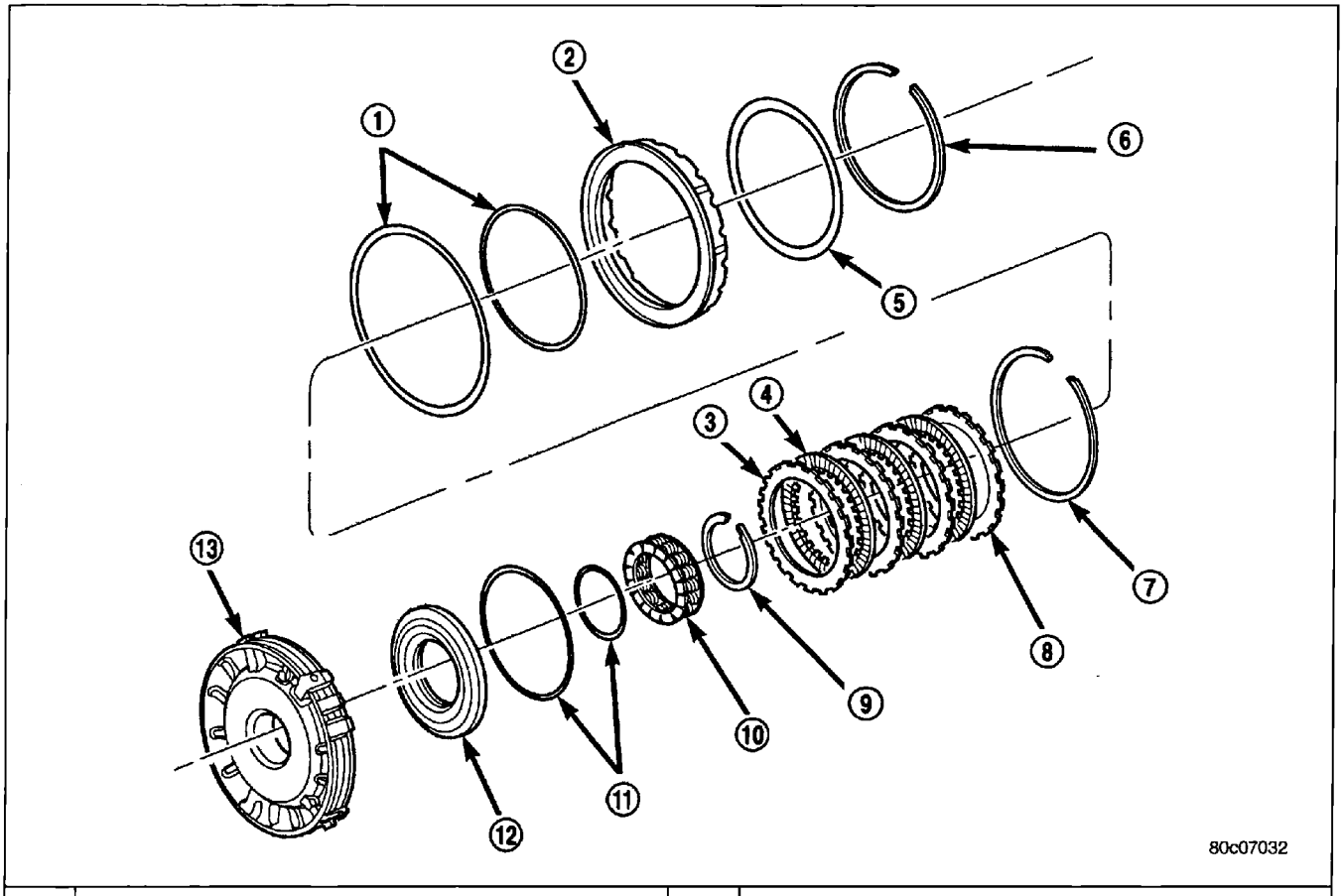

1	Seals	8	Reaction Plate
2	2C Piston	9	4C Clutch Snap Ring (Flat)
3	Plate (4C Clutch)	10	4C Return Spring Pack
4	Disc (4C Clutch)	11	Seals
5	2C Belleville Spring	12	4C Piston
6	2C Belleville Snap Ring	13	2C/4C Retainer/Bulkhead
7	4C Clutch Snap Ring (Select)		

Figure 40 4C Clutch and 2C Piston

2C Clutch Pack

Following the center bulkhead's rear snap ring is the 2C clutch pack. Note the order of the reaction plate to the steel plates and friction discs. Failure to install these parts in the correct order will result in transmission failure.

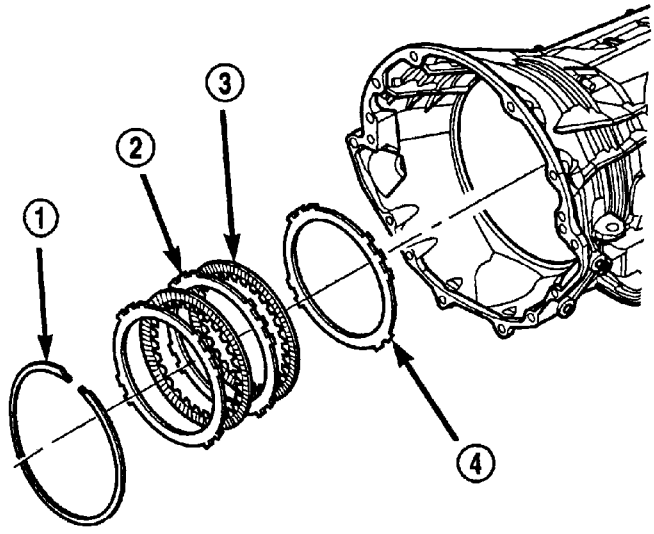

1	Center Bulkhead Rear Snap Ring	3	Friction Disc
2	Steel Plate	4	Reaction Plate (Thick)

Figure 41 2C Clutch Pack

2C Clutch

- Two steel plates and two friction discs (steel plates contain straight tabs and are installed with three tabs at the top and two tabs on the bottom)

4C Clutch

- Three steel plates and three friction discs (steel plates contain straight tabs)

2C/4C Disassembly

Disassembly of the 2C clutch retainer requires no special tools. Disassembly of the 4C clutch retainer requires spring compressor tool 8250 to compress the piston return spring which allows removal of the snap ring. Use the service information for detailed instructions on clutch disassembly.

Low/Reverse and Overrunning Clutch

The overrunning clutch is used during First gear operation. The L/R clutch friction plates spline to the outer race of the overrunning clutch and in turn, the overrunning clutch is splined to the reverse carrier/input annulus. The separator plates of the L/R clutch are splined to the L/R retainer which, in turn, is splined to the case.

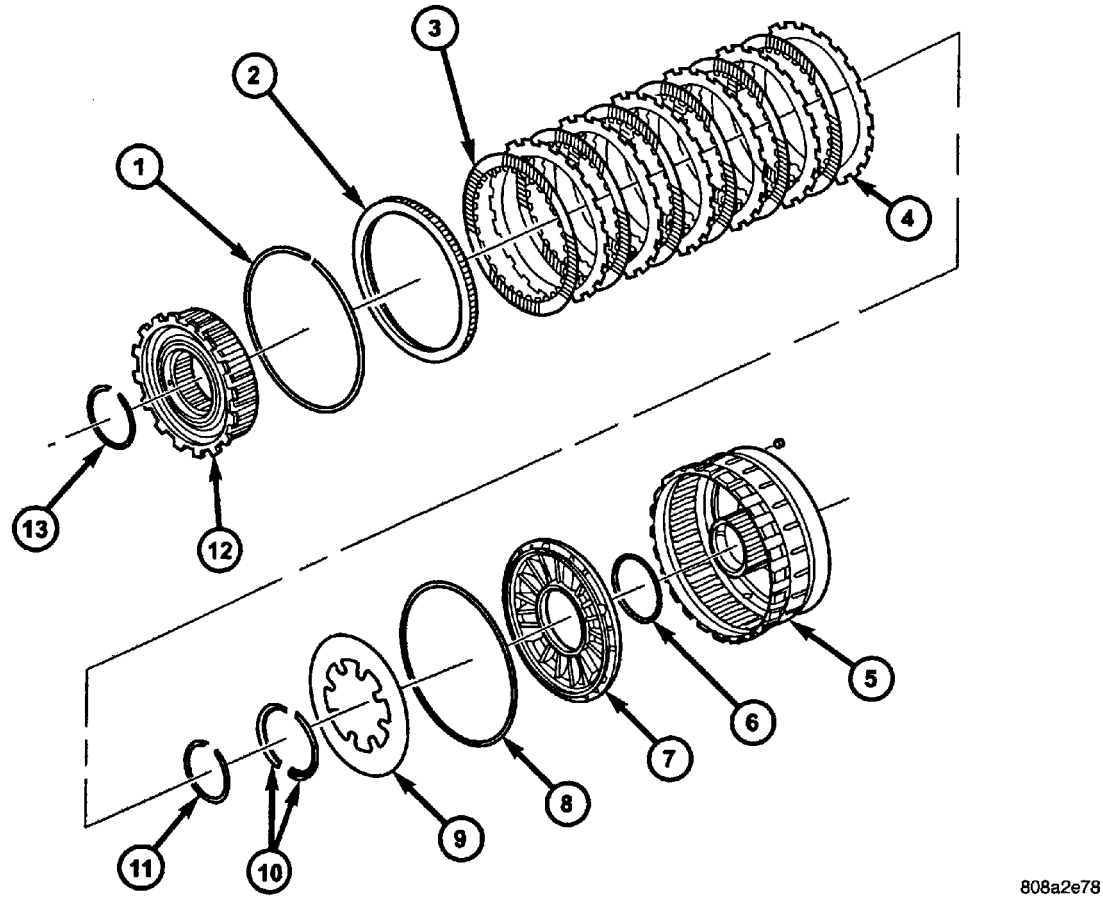

1	Snap Ring (Select)	8	Seal
2	Reaction Plate	9	Belleville Spring
3	Disc	10	Split Retainer
4	Plate	11	Snap Ring (Flat)
5	L/R Clutch Retainer	12	Overrunning Clutch Assembly
6	Seal	13	Snap Ring (Flat)
7	Piston		

Figure 42 Low/Reverse Clutch

Clutch Disc/Plate Identification

Low/Reverse Clutch

- Six steel plates and six friction discs (steel plates have straight tabs)
- Overrunning clutch

Low/Reverse Disassembly

Removal of the low/reverse clutch piston requires spring compressor tool 8285 to compress the Belleville spring which allows removal of the split retaining ring holding the spring into the low/reverse clutch retainer. Use the service information for detailed instructions on clutch disassembly.

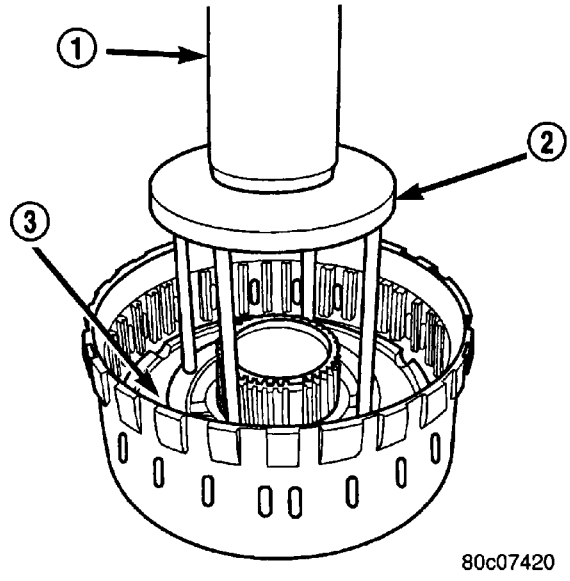

1	Press Arbor	3	Belleville Spring
2	Tool 8285		

Figure 43 Compress Low/Reverse Belleville Spring

Low/Reverse Reassembly

Clean the overrunning clutch with approved solvent and blow with compressed air, not cloth rags. Check the operation of the overrunning clutch which should turn freely one way and not the other. Replace the clutch if it turns freely both ways or drags one way and locks the other. Reinstall the split retaining ring into the bottom groove in the retainer using tool 8285 to compress the Belleville spring.

Low/Reverse Clutch Clearance Check

With the low/reverse clutch pack installed, position the low/reverse reaction plate into the clutch retainer. The reaction plate is directional and must be installed with the flat side down. Mount a dial indicator onto the hub and zero the needle of the indicator on the top clutch disc. Apply 20 psi air pressure to the clutch apply port on the OD of the retainer and measure the clutch clearance. Clearance must be measured in four places 90 degrees apart. Clearances that are not within specification require replacement of the low/reverse clutch pack snap ring.

2C/4C Center Bulkhead

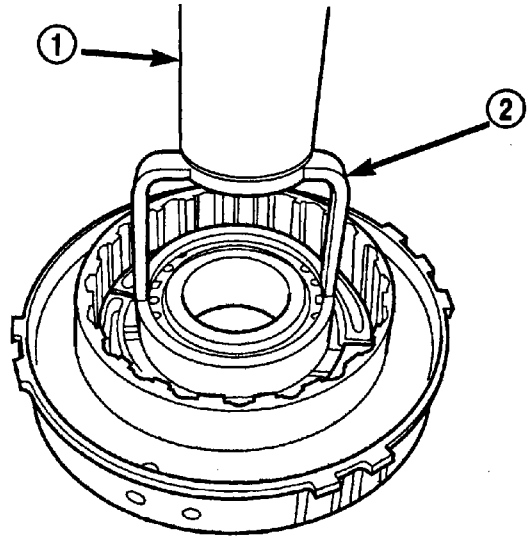

1	Press Arbor	2	Tool 8250

Figure 44 Compress 4C Piston Return Spring

4C Reassembly

Following installation of a lubricated 4C piston (which contains new seals) into the bulkhead/retainer, the piston return spring and snap ring are positioned over the snap ring groove in the retainer. Using Spring Compressor 8250 and a suitable shop press, compress the 4C piston return spring and install the snap ring.

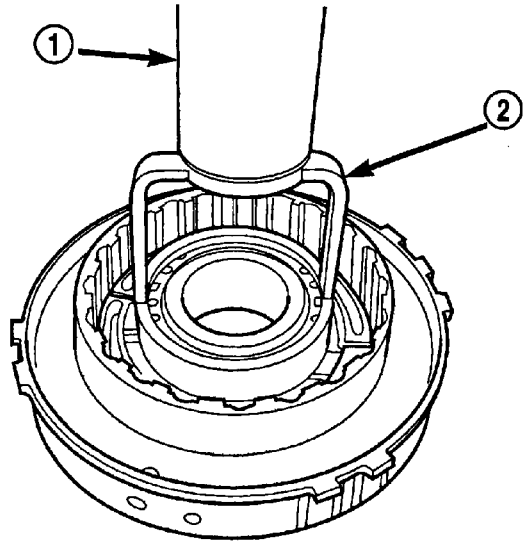

1	Press Arbor	2	Tool 8250

Figure 45 Compress 4C Piston Return Spring

4C Clutch Clearance Check

With the 4C clutch pack installed, position the 4C reaction plate into the clutch retainer with the steel separator plate against the piston. Clutch reaction plate is non-directional. Mount a dial indicator onto the hub and place the needle of the indicator on the clutch discs. Clearance must be measured in four places 90 degrees apart. Clearances that are not within specification require replacement of the 4C clutch pack snap ring which is selectable.

2C Reassembly

Following installation of a lubricated 2C piston (which contains new seals) into the bulkhead/retainer, the Belleville spring and snap ring are positioned over the snap ring groove in the retainer. Using Spring Compressor 8249 and a suitable shop press, compress the Belleville spring until the snap ring is engaged with the snap ring groove in the retainer.

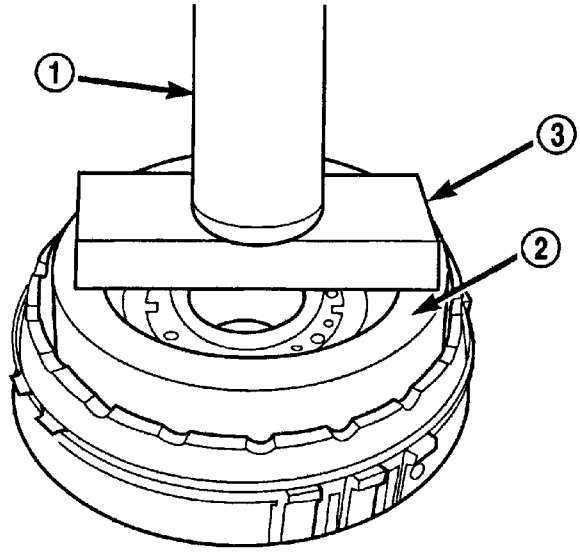

1	Press Arbor	3	Wood Block
2	Tool 8249		

Figure 46 Compress 2C Piston Return Spring

RFE PLANETARY GEARS

Reaction Planetary Gear Train

The reaction planetary carrier and reverse sun gear is a combined unit and is held by the 2C clutch when required. The reaction annulus gear is a standalone component that is either driven by the reverse clutch or held by the 4C clutch. The reaction sun gear is driven by the overdrive clutch.

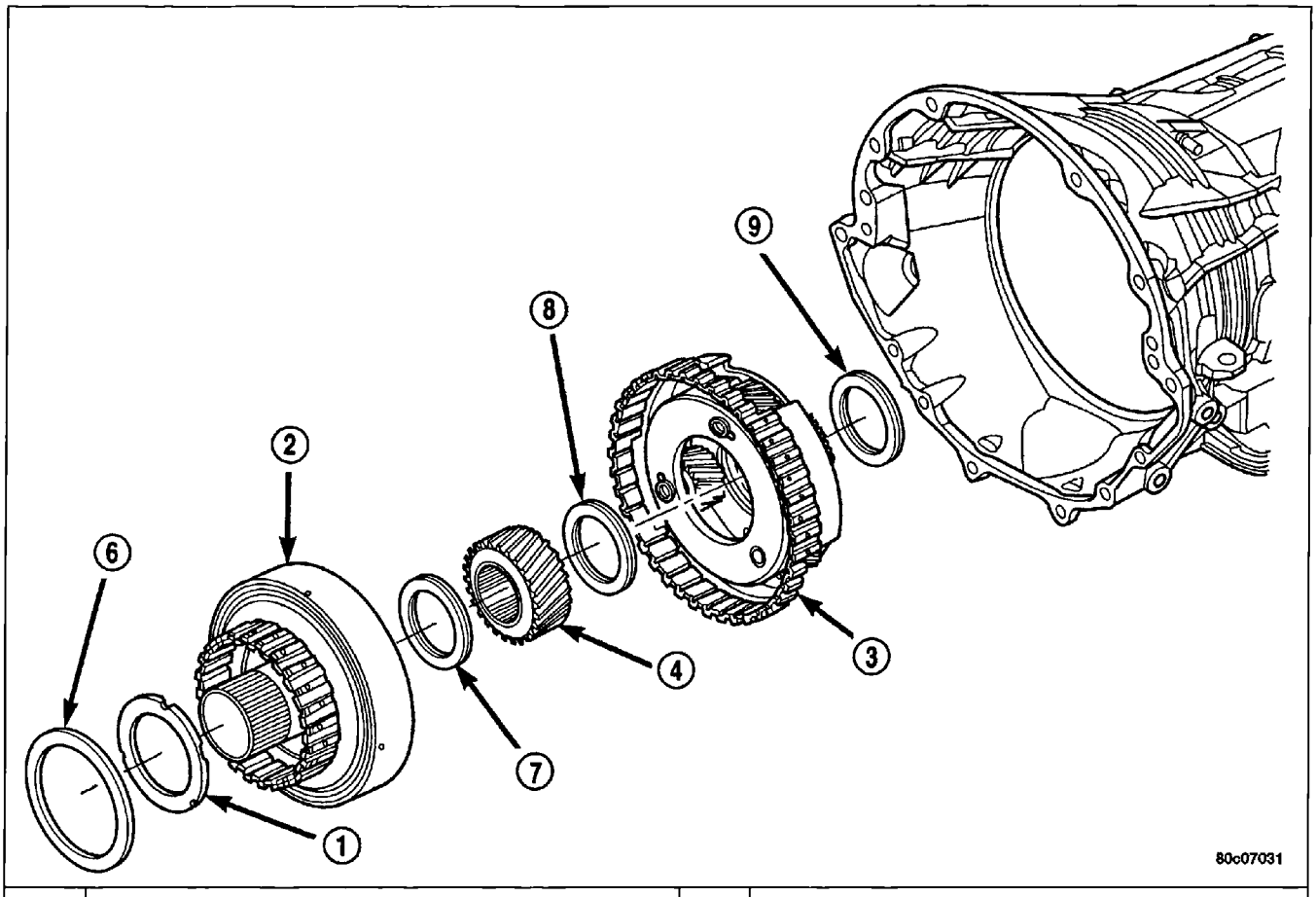

1	Thrust Plate (Select)	6	Bearing No. 6
2	Reaction Annulus Gear	7	Bearing No. 7
3	Reaction Carrier/Reverse Sun Gear	8	Reaction Annulus Bearing No. 8
4	Reaction Sun Gear	9	Bearing No. 9

Figure 47 Reaction Planetary Gear Train

Input/Reverse Planetary Gear Train

The reverse planetary gear set is the middle of the three planetary sets. The reverse planetary carrier is driven by the overdrive clutch as required. The reverse planetary carrier is also splined to the input annulus gear and can be held by the L/R clutch or the overrunning clutch. The reverse planetary annulus/input carrier and the output shaft are a combined unit.

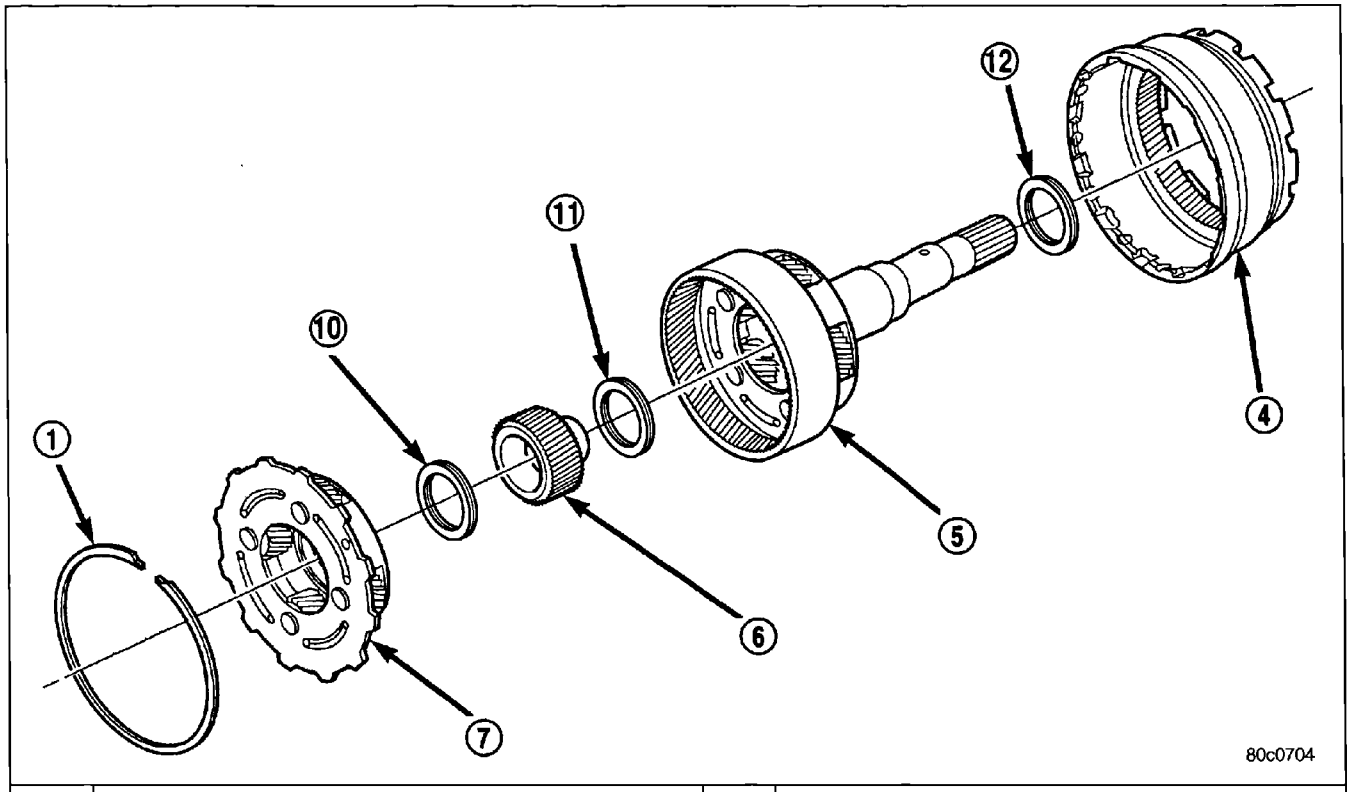

1	Snap Ring (Flat)	7	Reverse Planetary Carrier
4	Input Annulus	10	Bearing No. 10
5	Reverse Annulus/Input Carrier/Output Shaft	11	Bearing No. 11
6	Input Sun Gear	12	Bearing No. 12

Figure 48 Input/Reverse Planetary Gear Train

Planetary Gear Train Disassembly

The input annulus is held into the input carrier by a flat non-selective snap ring. Following snap ring removal, the planetary gear train components can be separated. While separating the planetary members, note the placement and direction of the Nos. 9, 10 and 11 bearings.

Planetary Inspection

Inspect all three planetary carrier gear sets for damaged gears, or thrust washers; carrier thrust washers and gears are NOT serviceable. Replace the carrier as an assembly if any of the carrier parts are damaged. The corresponding sun and annulus gears should be inspected and replaced if necessary. Any damage to the output shaft machined surfaces requires replacement of the shaft. Do not attempt to repair a damaged output shaft with crocus cloth.

Roller Thrust Bearing (Input/Reverse Planetary) Reassembly

Reassemble the input/reverse planetary gear set noting the orientation of the No. 10 and No. 11 roller thrust bearings. Retain bearings using Vaseline® or Trans-Gel. Position the bearings as follows:

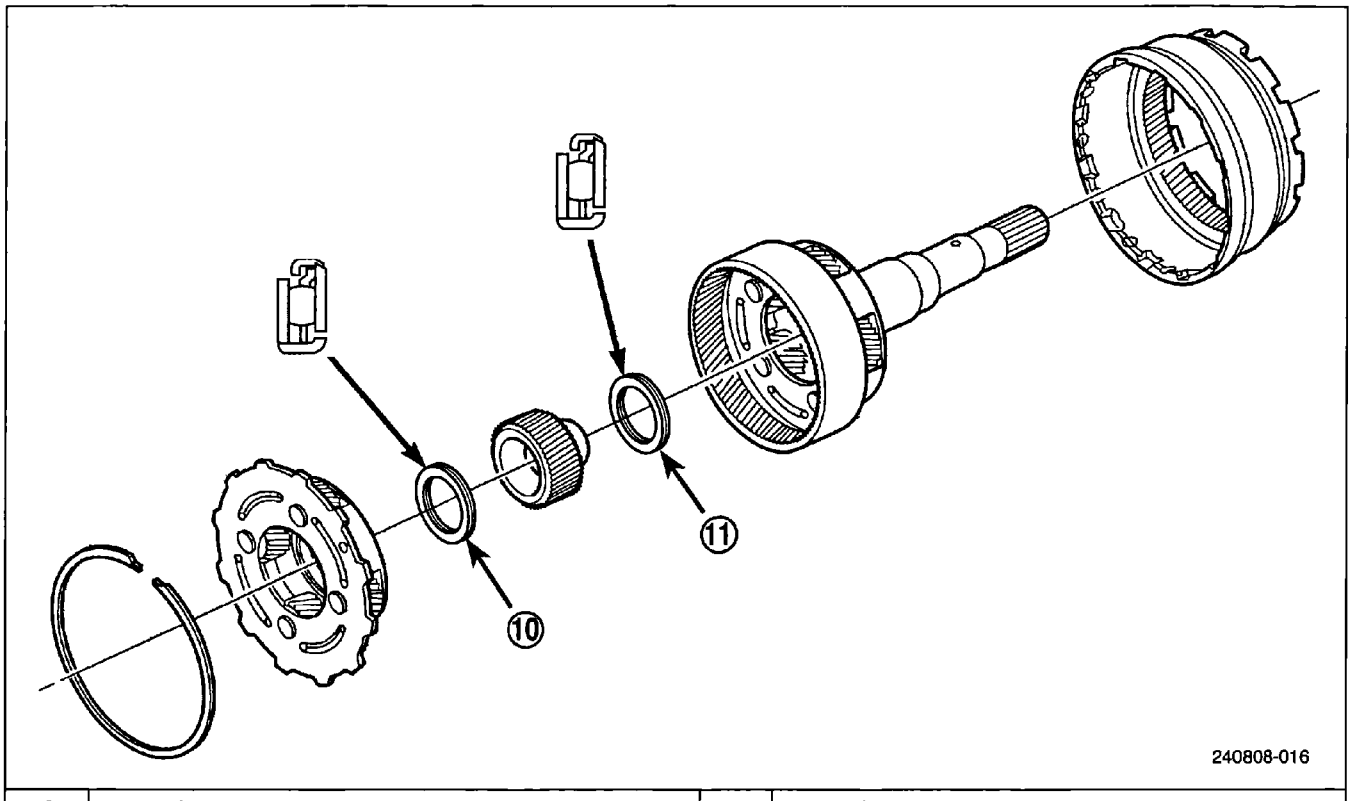

10	Bearing No. 10	11	Bearing No. 11

Figure 49 Input/Reverse Planetary Gear Train Roller Thrust Bearing Orientation

Planetary Gear Train Failure Analysis

In the example below the carrier pinion thrust washer spun out of position and was mangled by the annulus gear. A complete inspection of the gear set is required.

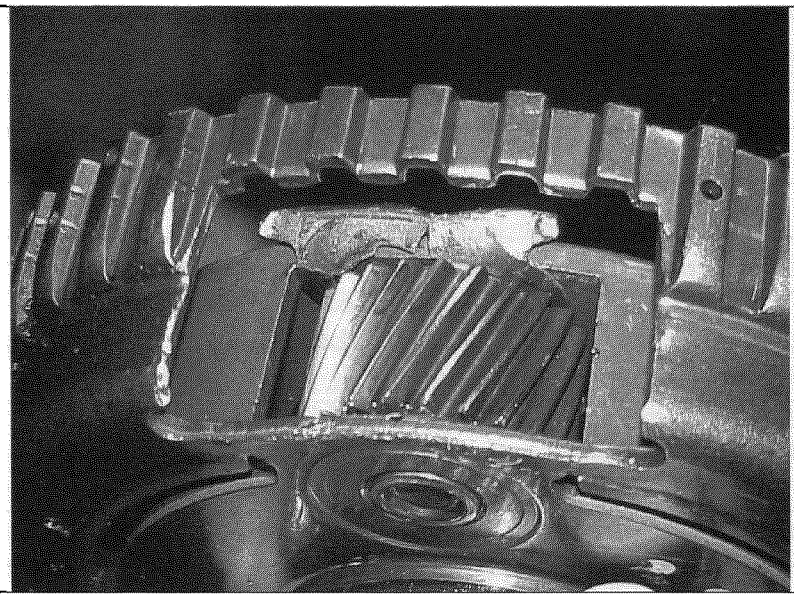

Figure 50 Carrier Pinion Thrust Washer

In this example the pinion gear fixed thrust washer is again spun out of position. Carrier replacement is required.

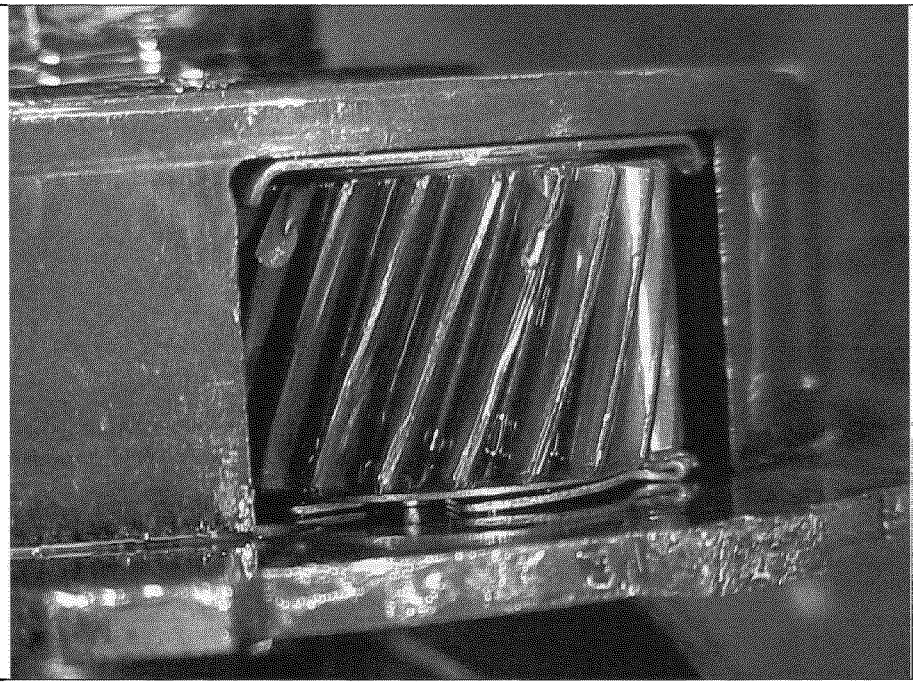

Figure 51 Carrier Pinion Thrust Washer

Notes:

RFE SERIES TRANSMISSION REASSEMBLY

Snap Rings

Remember, even though some snap rings look similar, they are not interchangeable. Complete listings of all snap rings used in the RFE transmission are found in the last section of this manual. Refer to the Appendix section during reassembly for correct snap ring placement.

2C Clutch Pack

For the 2C clutch pack clearance check, it is very important that as the 2C clutch is assembled that the reaction plate be installed first, followed by the 2C clutch pack and snap ring. Next, install the 4C retainer/bulkhead making sure that the oil feed holes are pointing toward the valve body. Install the 4C retainer tapered snap ring making sure that the snap ring opening faces toward the case opening at the valve body. The proper placement of the snap ring opening prevents the snap ring from making valve body contact. Use a feeler gauge to measure 2C clutch pack clearance between the reaction plate and the case at four different locations. If clutch pack clearance is not within specification, then the reaction plate and clutch pack must be replaced as the reaction plate is not selective. After clutch measurement, remove all 2C and 4C clutch components and reinstall after the input/reverse planetary assembly.

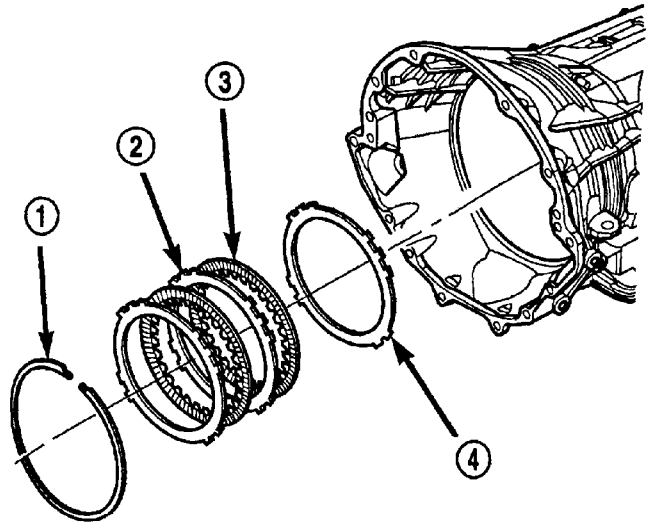

1	Center Bulkhead Rear Snap Ring	3	Friction Disc
2	Steel Plate	4	Reaction Plate (Thick)

Figure 52 2C Clutch Pack

Low/Reverse Clutch

As the L/R assembly is installed, ensure that the oil feed hole aligns with the oil passageways in the case area and that the bleed orifice is aligned with the notch in the rear of the transmission case. Install the tapered snap ring with the tapered side up. If the clutch assembly is not installed correctly, a delayed engagement or no low or reverse gear may result. Air check the clutch to verify low/reverse clutch action.

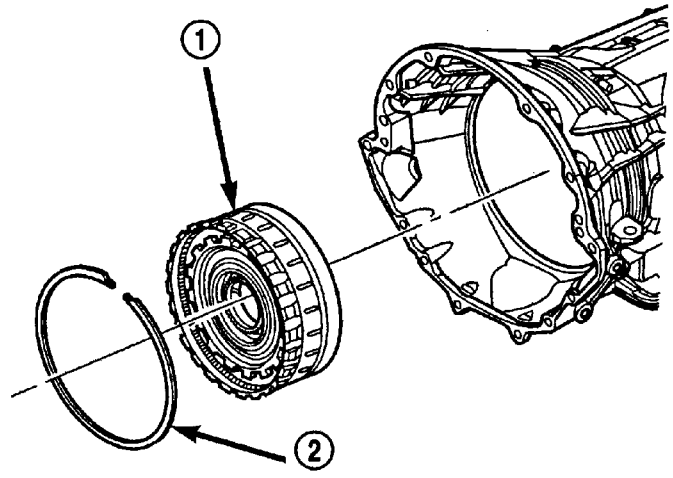

1	L/R Overrunning Clutch Assembly	2	Tapered Snap Ring

Figure 53 Low/Reverse Clutch Retainer

Input/Reverse Planetary Assembly

Roller Thrust Bearing Orientation

Note roller thrust bearing installation and position bearing Nos. 9 and 12 as shown in the following illustration. Retain the bearings using Vaseline® or Trans-Gel.

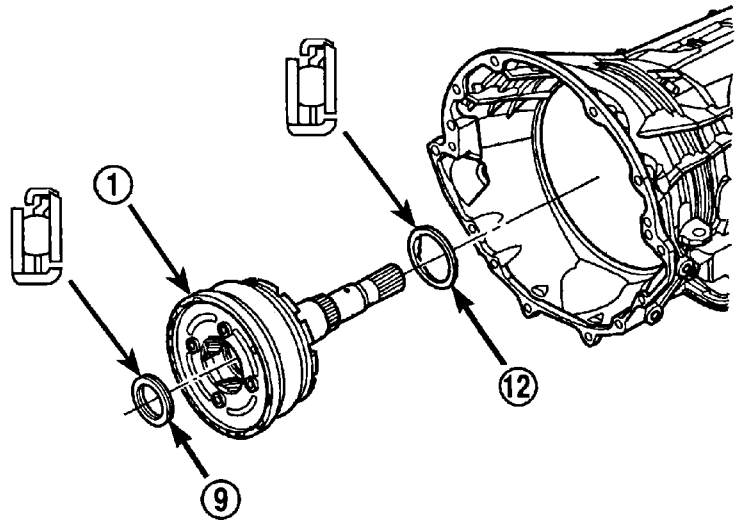

1	Input/Reverse Planetary Assembly	12	Bearing No. 12
9	Bearing No. 9		

Figure 54 Input/Reverse Planetary

Reaction annulus and carrier Assembly

Roller Thrust Bearing Orientation

Reassemble the planetary gear set noting the orientation of the Nos. 6, 7, 8 and 9 roller thrust bearings. Retain the bearings using Vaseline® or Trans-Gel. Position the bearings as follows:

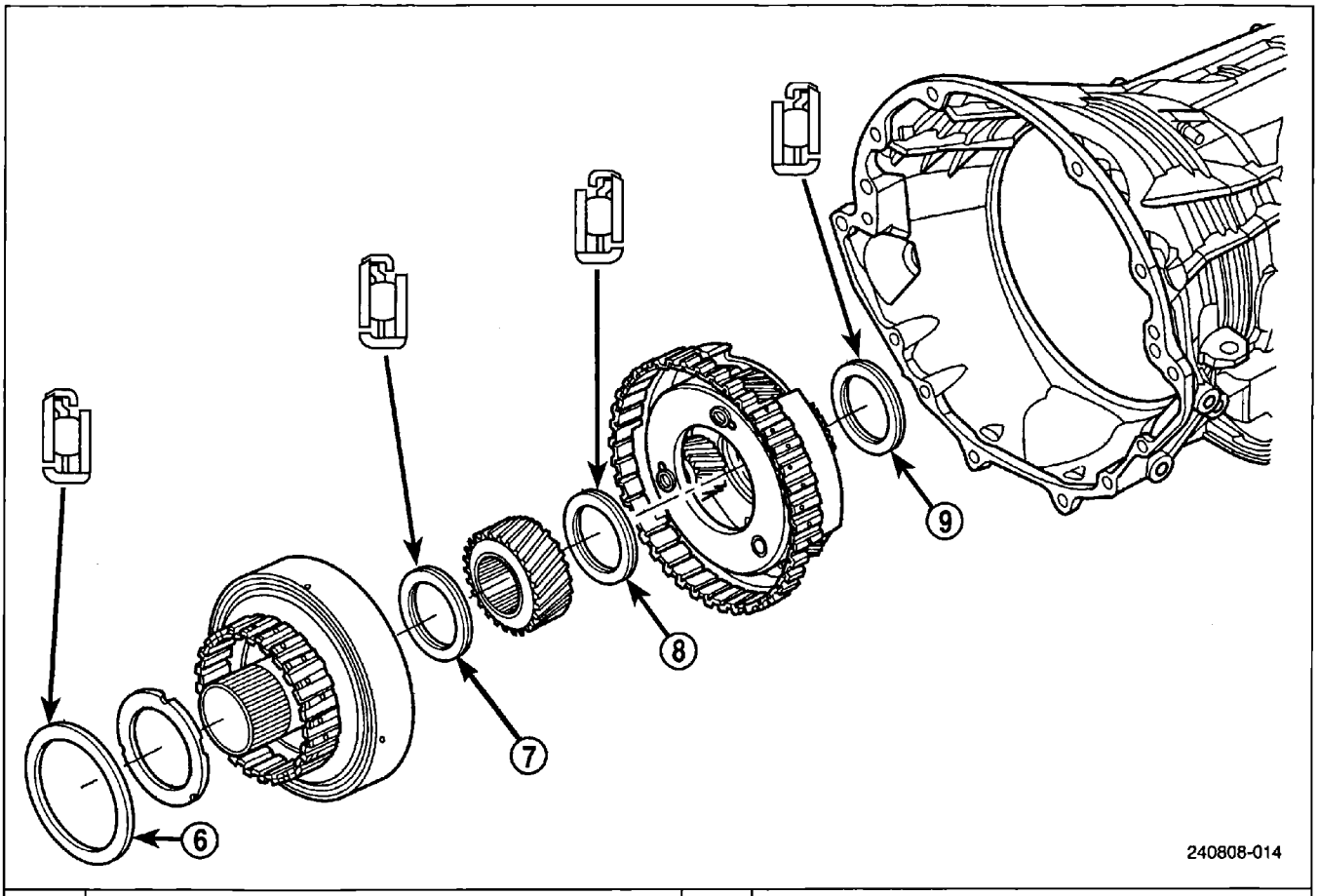

6	Bearing No. 6	8	Bearing No. 8
7	Bearing No. 7	9	Bearing No. 9

Figure 55 Reaction Planetary Roller Thrust Bearing Orientation

2C Clutch

Reinstall the 2C reaction plate and clutch pack into the transmission case. It is very important that the reaction plate be installed first. The 2C snap ring is not installed until after the reaction planetary carrier is installed.

2C Clutch Failure Analysis

Failure to install the 2C clutch parts in the correct order will result in transmission failure. If the 2C clutch pack is assembled with a thin separator plate first instead of the reaction plate, the plate will spin against the case and will destroy the 2C clutch and fill the transmission pan with gray sludge as shown in the illustration below.

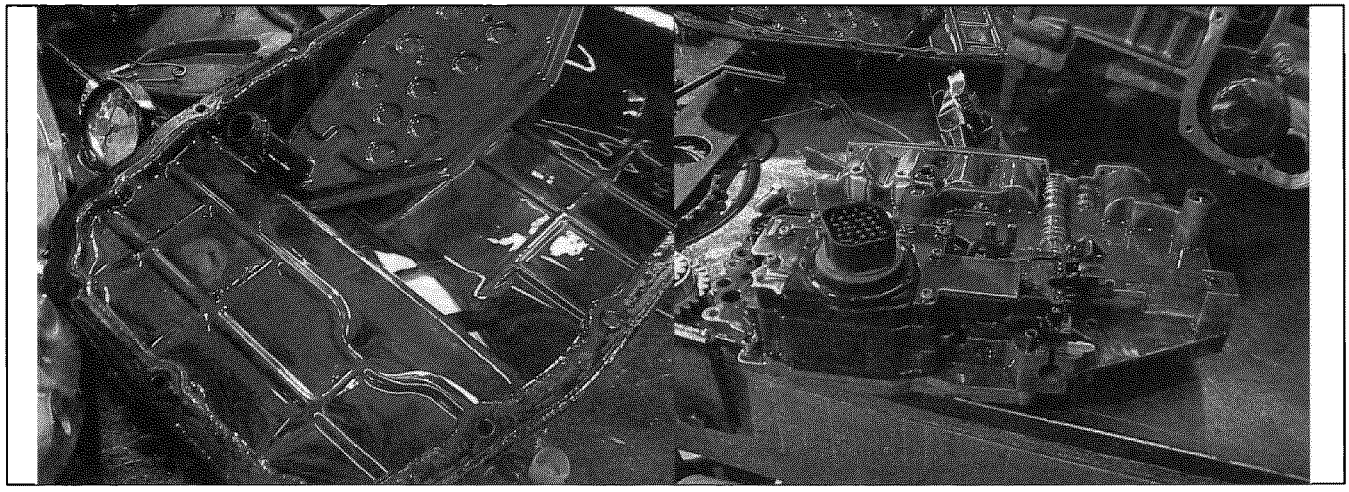

Figure 56 2C Clutch Pack Mis-Installation Damage

2C/4C Bulkhead

The center bulkhead is held in place using a tapered snap ring. Note that the tapered side must face forward and the painted side (if visible) must face the rear of the transmission case. Note also the position of the snap ring ends with respect to the case openings. Incorrectly positioned snap ring ends can interfere with the valve body. As the 4C bulkhead is installed, note its orientation to the oil feed holes at the valve body. If the bulkhead is not installed correctly, a delayed or no 2nd gear or fourth gear shift may result. Air check the 2C and 4C clutch operation.

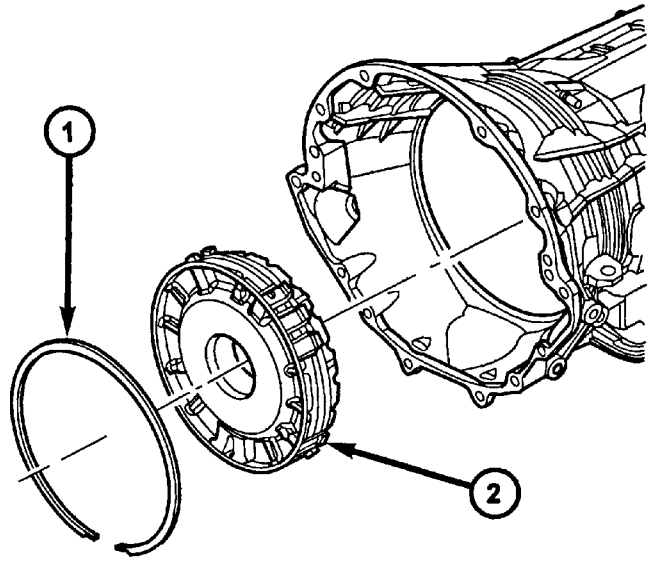

1	Snap Ring (Tapered)	2	4C Clutch Retainer/Bulkhead

Figure 57 2C/4C Clutch Retainer/Bulkhead

Output Shaft End Play

Using Alignment Plate 8261, Adapter 8266-17 from End Play Tool Set 8266 and Dial Indicator C-3339, measure and record the output shaft end play. A good deal of force is required to flatten the thrust bearings. If output shaft end play is not within specification, select the appropriate selective thrust plate and re-measure end play to verify selection.

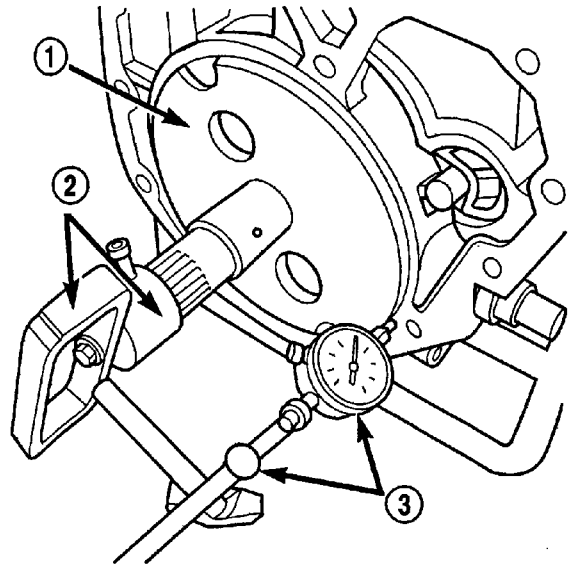

1	Tool 8261	3	Tool C-3339
2	Tool 8266		

Figure 58 Output Shaft End Play

Input Clutch Assembly

Roller Thrust Bearing Orientation

Position the number. 5 bearing and selective thrust plate onto the input clutch assembly. Bearing position is very important; refer to the following bearing illustration. Install the input clutch into the transmission case. To check for proper input clutch assembly into the case, visually inspect the input clutch position by looking into the input speed sensor hole. Tone wheel teeth should align with the sensor opening if the input clutch assembly is installed correctly. Install the No. 1 bearing (correctly orientated) onto the input clutch assembly. Retain the bearings using Vaseline® or Trans-Gel.

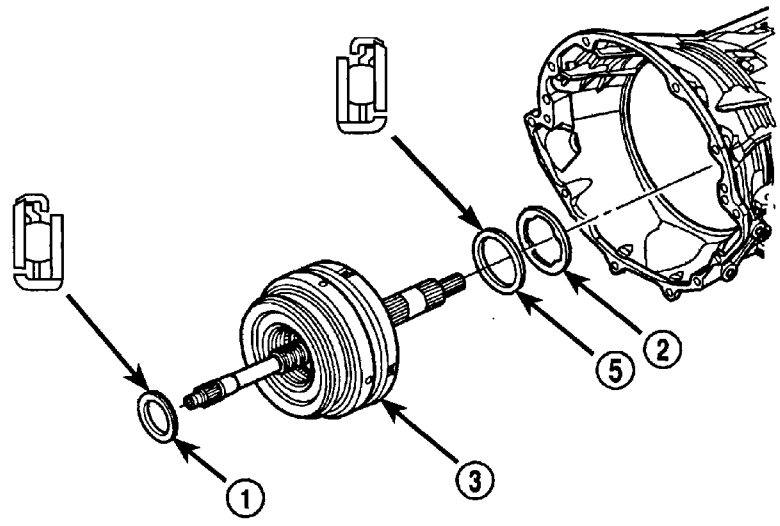

1	Bearing No. 1	3	Input Clutch Assembly
2	Thrust Plate (Selective)	5	Bearing No. 5

Figure 59 Input Clutch Assembly

Oil Pump

The oil pump is attached to the front of the transmission case by six bolts. Maintain inward pressure while installing the oil pump to prevent the Nos. 2, 3 and/or 4 bearings from becoming dislodged and falling out of alignment. If the Nos. 2, 3 and/or 4 bearings do become dislodged, this condition will be revealed during an input shaft end play check which is below specification (smaller gap). Mis-positioned bearings will cause transmission failure.

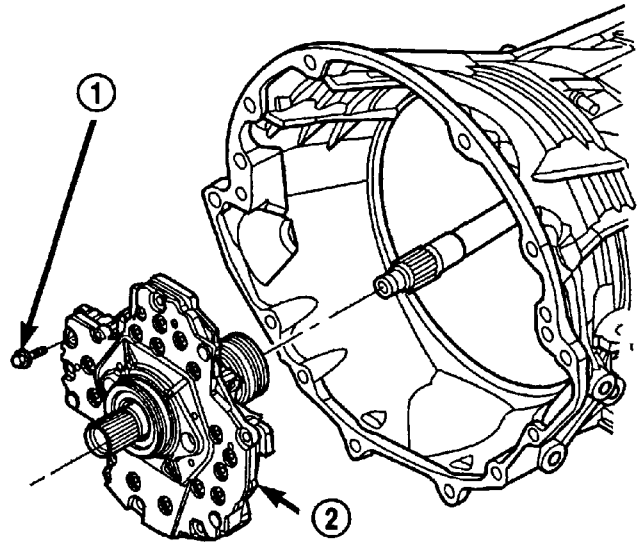

1	Oil Pump-to-Case Bolt	2	Oil Pump Assembly

Figure 60 Transmission Oil Pump

Input Shaft End Play

Using Adapter 8266-1 from the End Play Tool Set 8266 and Dial Indicator C-3339, measure and record the input shaft end play. If input shaft end play is not within specification, select the appropriate selective thrust plate at the No. 5 bearing and re-measure end play to verify selection. Also, verify that the number 2, 3, and/or 4 bearings have not fallen out of position inside the input clutch assembly.

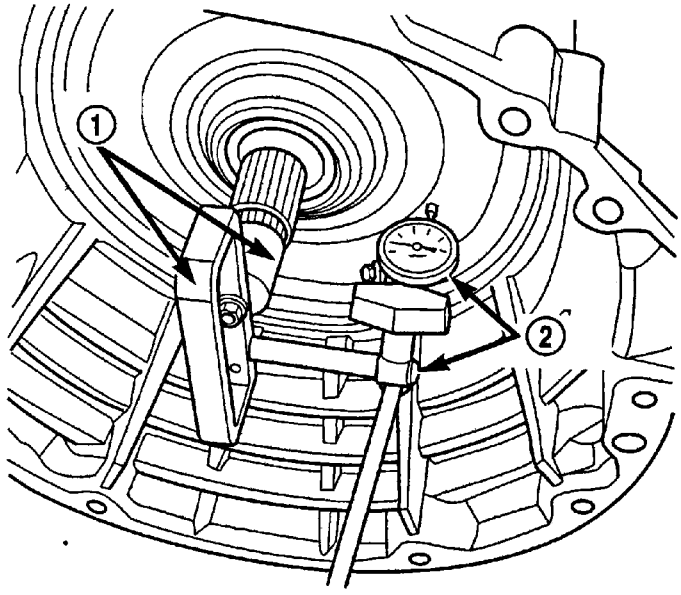

1	Tool 8266	2	Tool C-3339

Figure 61 Input Shaft End Play

Transmission Front Cover

Replacement of the front cover is recommended. The service pump kit and overhaul kit each include a new pump cover (with seals). The individual clutch rebuild kits do not include the pump cover. The pump cover (with seals) is also available as a separate service part.

The pump cover's inner and outer seals are glued to the cover. The outer seal is an O-ring which seals against the case bore on its OD. The inner seal is a square-section face seal which seals against a vertical face on the pump housing hub and is held against the front face by compression from the inner snap ring. Installer tool 8255 is required to compress the seal and allow the snap ring to seat onto the pump housing hub groove.

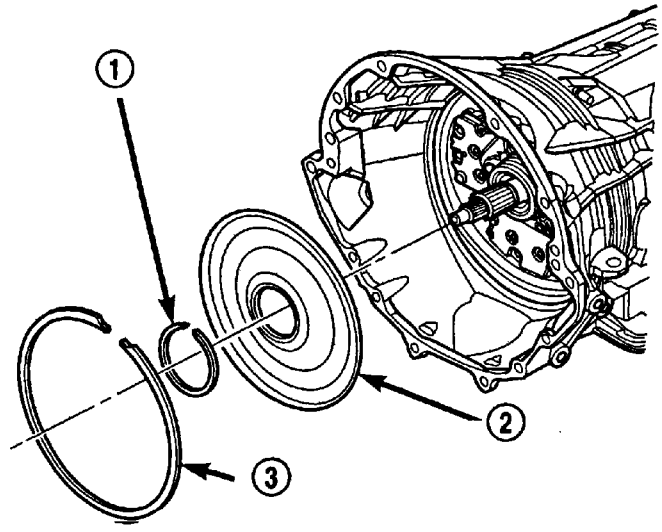

1	Inner Snap Ring	3	Outer Snap Ring
2	Transmission Cover with Seals		

Figure 62 Transmission Front Cover

Air Pressure Testing

Air pressure testing following a transmission overhaul is required to check transmission clutch operation before the transmission is fully reassembled and installed in the vehicle. The test can be conducted with the transmission on the work bench. Perform the following steps when air pressure testing the clutches:

- Test must be conducted before the valve body is reinstalled.
- Apply air pressure to the ports one at a time.

Note: The compressed air supply must be free of all dirt and moisture. Use a pressure not greater than 30 psi.

- Listen for the clutch to apply (heard as a slight thud sound). If a large amount of air is heard escaping, the transmission must be disassembled and all seals inspected.

Note: Each RFE clutch includes a bleed orifice, so a small amount of air leakage is normal.

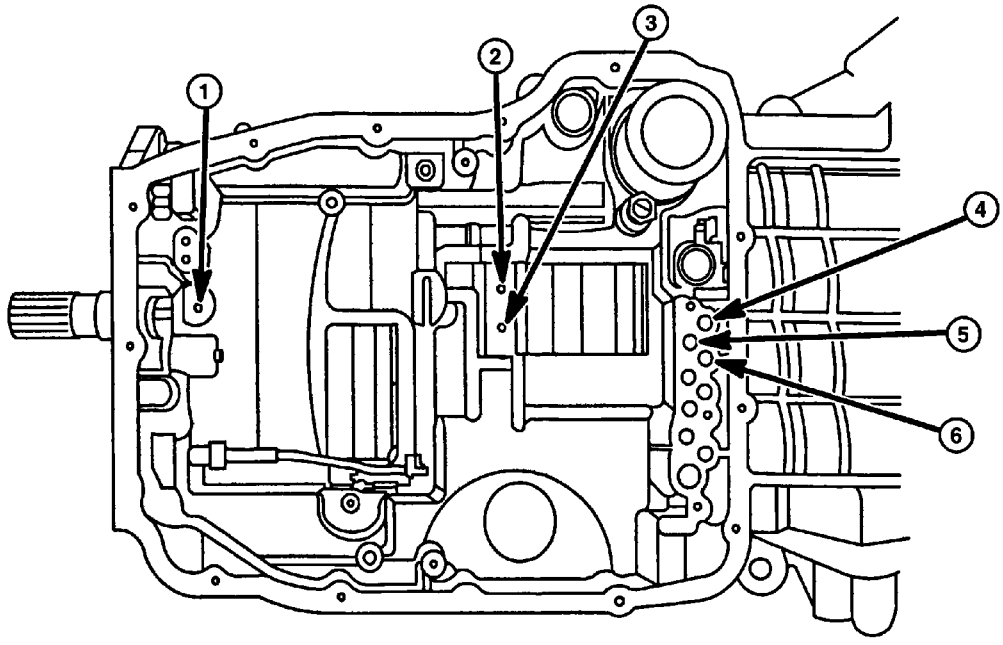

1	Low/Reverse Clutch	4	Overdrive Clutch
2	4C Clutch	5	Underdrive Clutch
3	2C Clutch	6	Reverse Clutch

Figure 63 Clutch Pressure Ports

Notes:

Notes:

VALVE BODY ASSEMBLY

The main valve body contains three valves, five accumulators, seven check balls and a solenoid/pressure switch assembly that controls fluid delivery to the frictional clutches.

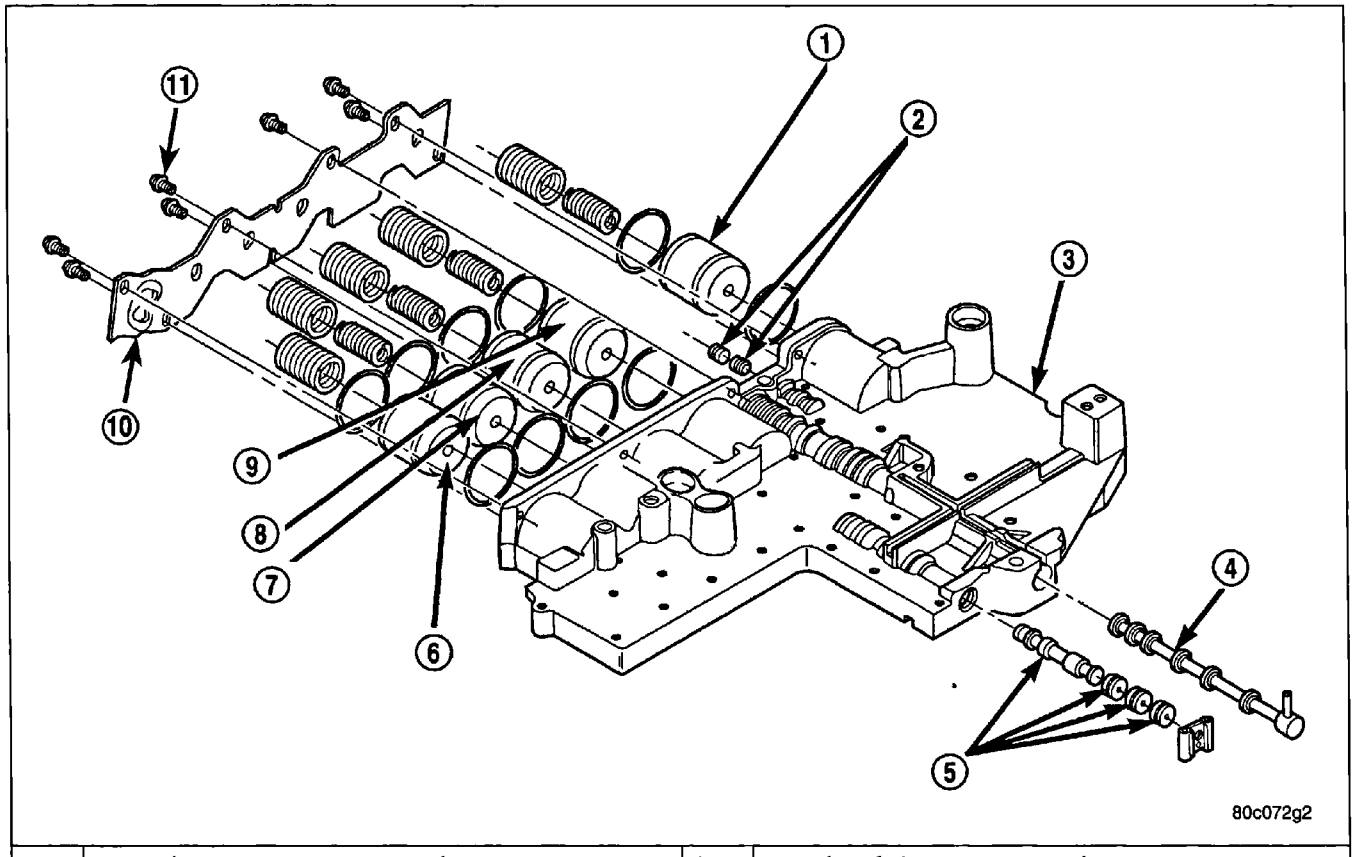

1	Low/Reverse Accumulator	7	Underdrive Accumulator
2	Low/Reverse Switch Valve and Plug	8	4C Accumulator
3	Valve Body	9	2C Accumulator
4	Manual Valve	10	Accumulator Cover Plate (Partial)
5	Solenoid Switch Valve and Plugs	11	Accumulator Cover Plate Screws (60 in. lbs.)
6	Overdrive Accumulator		

Figure 64 Valve Body Assembly

Solenoid Switch Valve

The solenoid switch valve (SSV) allows the use of one solenoid to control both the L/R clutch and the torque converter clutch. In First gear, the SSV is in a down-shifted position and fluid from the LR/CC solenoid feeds the L/R clutch circuit. In Second and higher gears, the solenoid feeds the TCC switch valve and the TCC regulator valve.

Manual Valve

The manual valve directs fluid to the correct circuits needed for a specific gear or driving range. The roller detent spring engages the detents on the Transmission Range Sensor (TRS) selector plate, which holds the manual valve in the appropriate gear position.

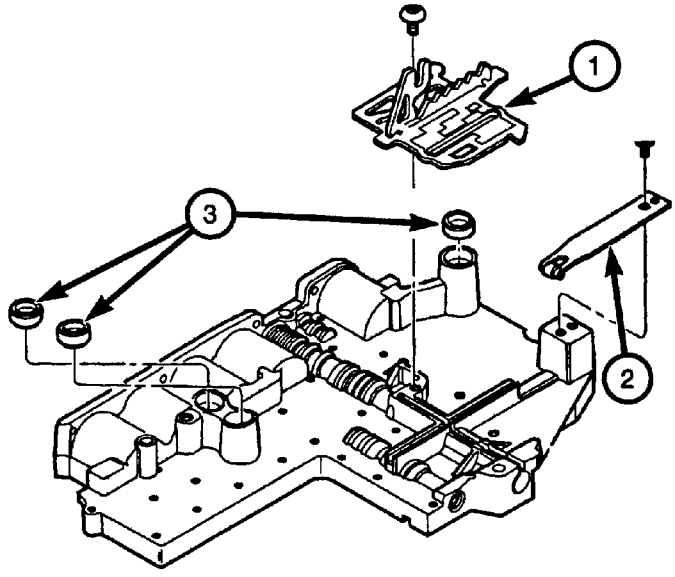

1	TRS Selector Plate	3	Clutch Passage (Tower) Seals
2	Detent Spring		

Figure 65 TRS Selector Plate and Detent Spring

Low/Reverse Switch Valve

The low/reverse switch valve allows the L/R clutch to be applied by either the LR/CC solenoid (in 1st gear) or the MS solenoid (in Reverse).

Accumulators

Five accumulators are located in the valve body casting. Each utilizes Teflon seal rings and two return springs (except for the OD accumulator which has only one spring).

Solenoids

Seven solenoids are used in the RFE transmission solenoid/pressure switch module. The UD, OD, 4C, 2C, LR and Multi-Select (MS) solenoids are used to control the application of the clutch elements. Also located in the solenoid module is the pressure control solenoid. There are normally applied solenoids and normally vented solenoids used. The MS and UD solenoids are normally applied. The LR/CC, OD, 4C and 2C solenoids are normally vented.

Valves

Valves can be cleaned with standard parts cleaning solution. Never use any type of caustic solution. Use compressed air to dry valves and the valve body. Do not use rags or shop towels to dry parts. Lint from these materials can stick to valve body parts and interfere with valve operation, and clog filters and fluid passages.

Transmission failures that generate large amounts of ferrous metal (such as bearing or thrust plate failures) may require replacement of the valve body as an assembly, if metal shavings become trapped between the valves and the bore causing irreparable damage.

Accumulator Cover

The accumulator cover is attached to the valve body using seven screws. If these screws are not tightened properly, the accumulator can pound on the cover and eventually loosen the screws to the point that they fall out, thus allowing the accumulator to dislodge. It is essential that the accumulator cover screws be tightened to the proper torque (60 in. lbs.) at reassembly. Do not use air tools to remove the valve body accumulator cover screws. A hand held torx-bit screwdriver can be used that gives opportunity to feel if a certain screw or screws are loose and not holding properly.

VALVE BODY FAILURE ANALYSIS

Valve Body Passageways

Although the example below is of a pump valve body, the same applies to any valve body surface. The fluid passageway contains a very deep gouge in the main face. Notice that light from the flashlight is visible underneath the scale in the gouged area. This type of damage allows fluid to leak into an adjacent passageway and could cause the transmission to engage two gears at the same time or some other mistimed event. This type of failure cannot be repaired and the part must be replaced.

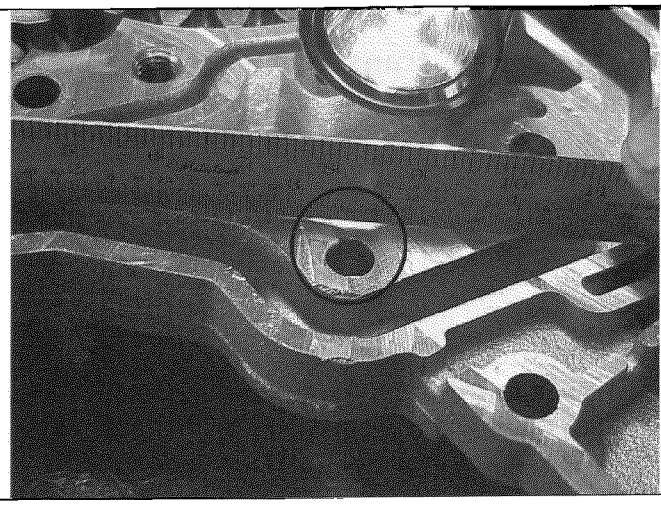

Figure 66 Valve Body Machining Gouges

Extra Check Ball

In the example below, an extra check ball has been accidentally added to a cavity that is incorrect. The result of this action is unpredictable depending on where the extra check ball is placed. It is very important the check balls be placed in only the correct locations.

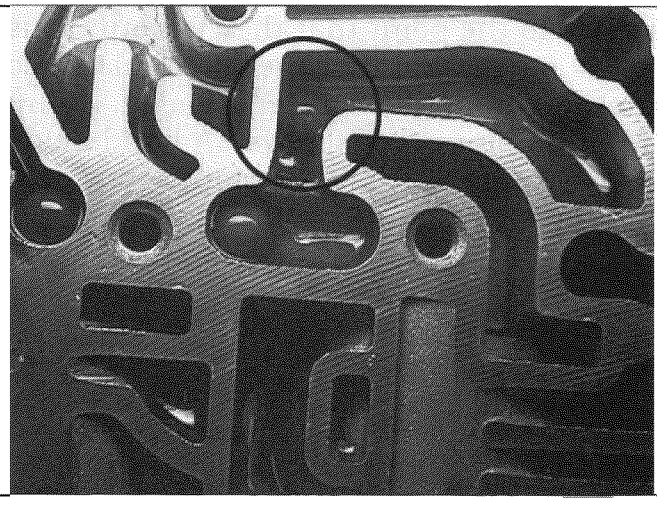

Figure 67 Extra Check Ball

Cut Check Ball

In the example below a large section has broken away from the check ball. This is a typical example of check ball damage in that it will appear as an apple with a bite taken out of it. This type of damage will result in an intermittent shift problem, depending on how the check ball falls. If it falls on the damaged side, it will leak and cause a shift problem; but if it falls on the non-damaged side, it will work normally.

Figure 68 Cut Check Ball

Tower Seals

In this example the tower seal (clutch passage seal) is cut and leaking. This leak can cause reduced fluid flow to the clutches controlled by this tower. Reduced fluid pressure can cause the clutch to engage late or allow the clutch to slip. Care should be taken during seal replacement or valve body installation to avoid this damage.

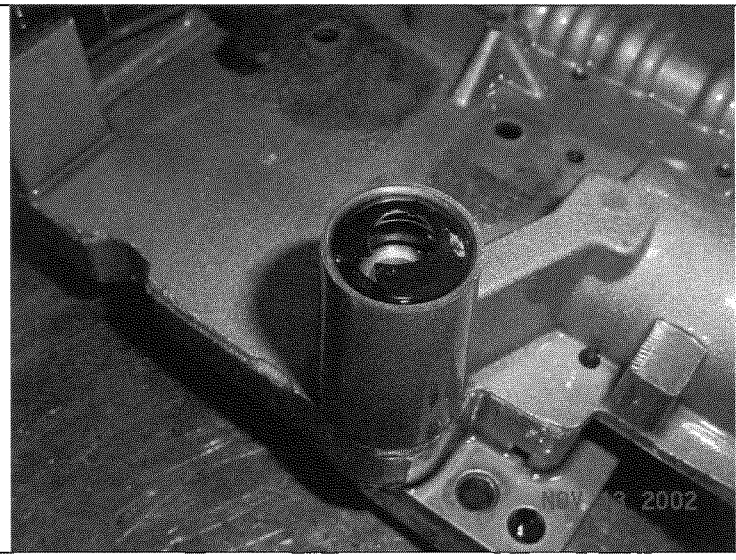

Figure 69 Tower Seal Damage

Accumulator Cover

In the example below the screws were not tightened properly, the accumulator forced on the cover and eventually loosened the screws to the point they fell out, thus allowing the accumulator to dislodge.

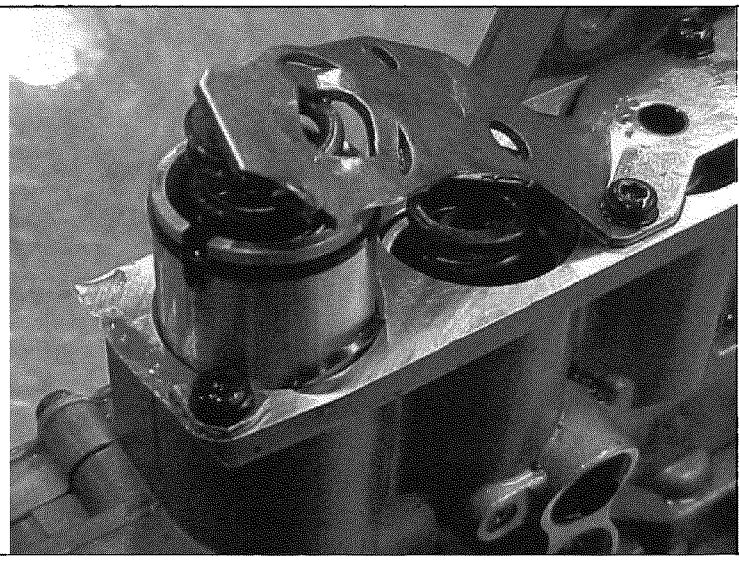

Figure 70 Accumulator Cover Damage

Accumulator Piston

In this example the accumulator piston was not correctly machined at the time of manufacture. The resulting thin wall at the top of the piston cracked, allowing large amounts of fluid to leak past the piston. This resulted in clutch slippage and a ratio fault.

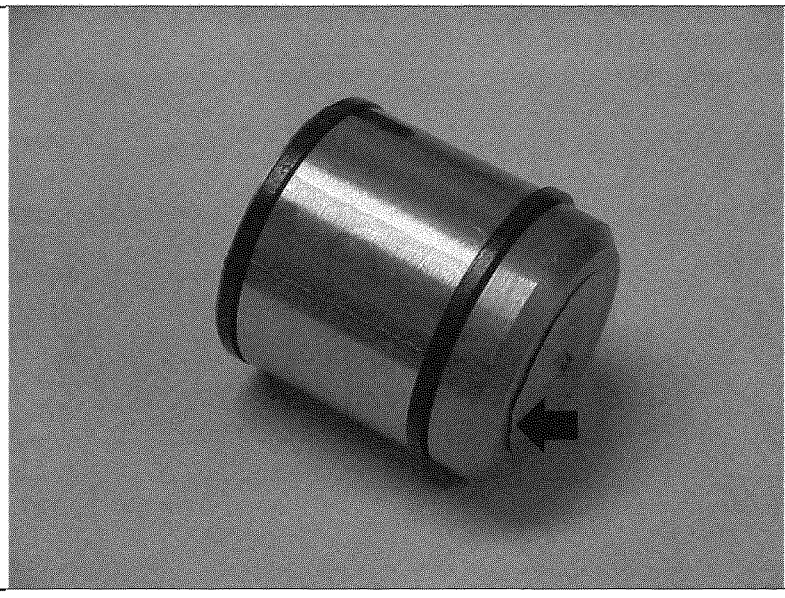

Figure 71 Cracked Wall in Mis-machined Piston

TRANSMISSION FILTER REQUIREMENTS

The transmission primary oil filter incorporates a filter neck that connects directly to the oil pump rather than the valve body. It is very important that the oil pump connection is correct and the filter neck is properly installed in its seal. It is also very important that the filter neck seal is correctly installed in the oil pump bore before the filter is installed. The seal must be installed with its flange flush against the pump casting, all the way around.

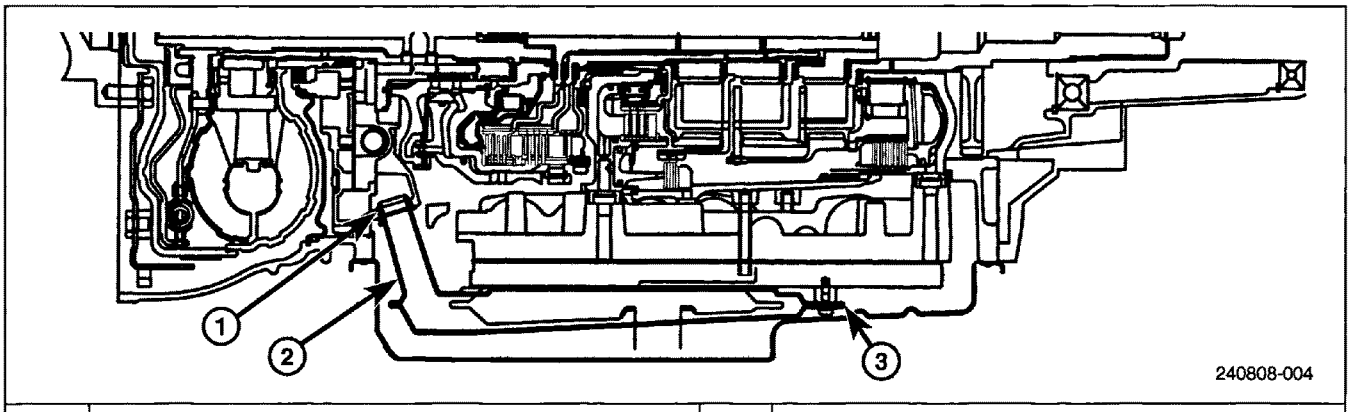

1	Primary Oil Filter Seal	3	Primary Oil Filter Attachment Screw
2	Primary Oil Filter Neck		

Figure 72 Oil Filter Assembly

Note: DO NOT install the seal onto the filter neck and attempt to install the filter and seal as an assembly. This action will allow the oil pump to aerate the fluid and damage the transmission if the seal is not installed "first" before the filter is installed.

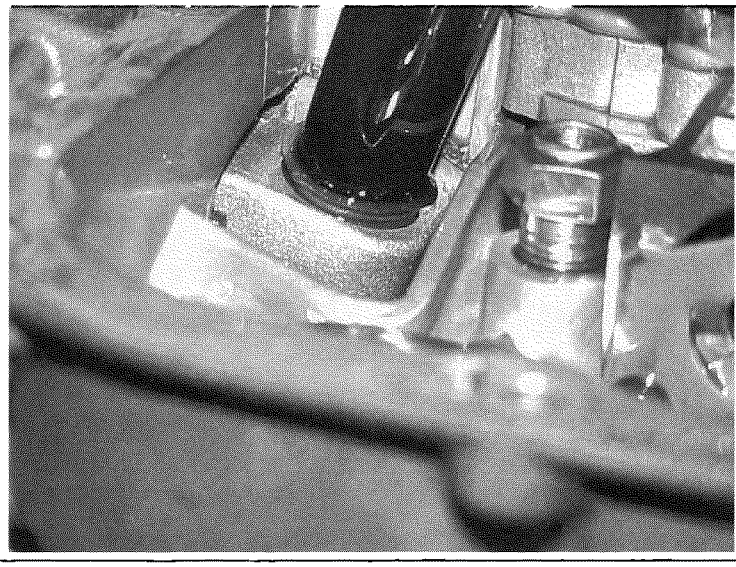

Figure 73 Incorrect Filter Seal Installation

Converter Installation

The torque converter hub and drive flats should be free of sharp edges, burrs, scratches or nicks. The hub should be smooth to avoid damaging the pump seal at installation. Carefully insert the converter in the oil pump and then rotate back and forth until fully seated in the pump gears. Failure to properly insert the converter hub in the pump gears could lead to gear failure as shown in the following illustration.

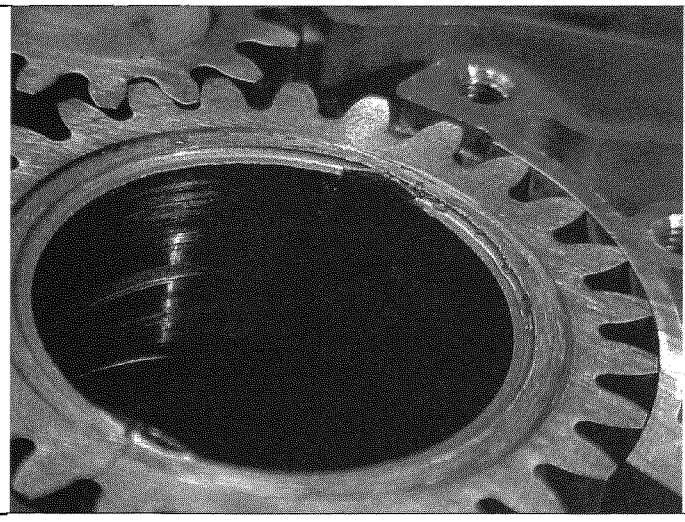

Figure 74 Pump Drive Gear Sheared (Converter Not Properly Aligned)

Check converter seating with a steel scale and straightedge. The surface of the converter lugs should be at least 13 mm (1/2 in.) to the rear of the straightedge when the converter is fully installed.

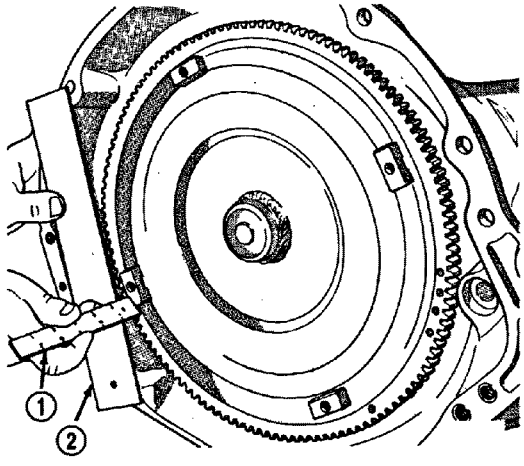

240808-028

1	Scale	2	Straightedge

Figure 75 Checking Torque Converter Seating (Typical)

Notes:

MODULE 4 TRANSMISSION ADAPTATION AND REPAIR VERIFICATION

QUICK LEARN

The Quick Learn procedure requires the use of the Diagnostic Scan Tool.

This program recalibrates the Transmission Control Module (TCM) to provide "like new" transmission operation, including improved shift quality.

The Quick Learn procedure should be performed if any of the following repairs are performed.

- Transmission assembly replacement
- TCM replacement
- Transmission oil pump replacement
- Solenoid/pressure switch assembly replacement
- Internal transmission component replacement or rebuild
- Valve body replacement or recondition

To perform the Quick Learn procedure, the following conditions must be met:

- The brakes must be applied.
- The engine speed must be above 500 rpm.
- The throttle angle must be less than 3 degrees.
- The transmission oil temperature must be between 16–93°C (60–200°F).
- The shift lever position must stay in Park until prompted to Overdrive.
- When prompted to Overdrive, the shift lever position must remain in Overdrive until the scan tool indicates the procedure is completed.

If the preceding conditions are not met, the Quick Learn procedure is aborted.

DRIVE LEARN

The Drive Learn procedure can be used at any time to "fine tune" any shifts that are particularly objectionable. When the transmission has been repaired and the Quick Learn procedure has been performed on the TCM, the Drive Learn procedure is optional.

It is not necessary to perform the complete Drive Learn procedures whenever there is a shift quality complaint. It is only necessary to perform portions of the Drive Learn procedure that target the objectionable shift.

The Drive Learn procedure consists of several portions that can be performed independently as needed to correct or improve a particular shift.

- Learn a smooth first neutral-to-drive shift.
- Learn a smooth neutral-to-drive garage shift.
- Learn the first 2–3 upshift after a restart or shift to reverse.
- Learn a smooth 2–3 and 3–4 upshift.
- Learn a smooth 4–3 coastdown and part throttle 4–3 kickdown.
- Learn a smooth 1–2 upshift and 3–2 kickdown.
- Learn a smooth manual 2–1 pulldown shift.
- Learn a smooth neutral-to-reverse shift.
- Learn a smooth 4–5 upshift.

TRANSMISSION REPAIR VERIFICATION TESTING

As is always with any transmission service requiring component replacement or when the TCM has been replaced, you must verify that the repair is complete and has corrected the initial concern. There should be no Diagnostic Trouble Codes (DTCs) present and the transmission must be shifting properly with no fluid leaks.

After performing a TCM Quick Learn, the vehicle must be road tested to perform the RFE Transmission Verification Test. The verification test is similar to Drive Learn and requires the Diagnostic Scan Tool be used.

Preliminary steps before the Repair Verification Test are necessary.

- Connect the Diagnostic Scan Tool to the Data Link Connector (DLC).
- Make sure all transmission components and connectors are connected and in place.
- Erase any initial DTCs set as a result of the original concern or from testing.
- Start and run the engine until the transmission temperature is above 43°C (110°F). Use the Diagnostic Scan Tool to verify the correct temperature.
- Check the transmission fluid level and adjust as necessary. Refer to the appropriate service information for the procedure.

With the preliminary steps taken, perform a Quick Learn so that the TCM can learn the initial Clutch Volume Index (CVI) values.

Take the vehicle on a road test with the Diagnostic Scan Tool connected to monitor transmission temperature, throttle angle (via TPS) and any DTCs that might occur.

The Verification Test consists of the following:

- Make 15 to 20 1–2, 2–3, 3–4 and 4–5 (545RFE only) upshifts.
- Perform the shifts from a standing start to 97 km/h (60 mph) with a constant throttle opening angle of 20 to 25 degrees (use Diagnostic Scan Tool).
- Perform five to eight wide open throttle kickdown shifts below 40 km/h (25 mph). You should allow at least five seconds each in second gear and third gear between each kickdown shift.
- Monitor for any DTCs using the Diagnostic Scan Tool during the road test repair verification.
- Use the OBDII Task Manager to run Good Trip time in each gear to confirm a good repair and to make sure that no DTCs have reset.

After the road test verification, if there are any additional DTCs, refer to the appropriate diagnostic test procedures to correct the condition that caused the DTC(s) to be set. Clear any DTCs after testing. Perform the road test again for correct repair verification.

When done, use the Diagnostic Scan Tool to perform the Battery Disconnect. This clears any EATX DTC Event Data that was recorded as a result of the latest DTC.

With no DTCs and proper and smooth transmission shifting, the repair is complete.

Photo copy use on each rebuild.

DRIVE LEARN JOB AID

	Start Value	Finish Value
Learn 1st Neutral to Drive Shift.		
1st ND UD CVI	_____	_____
Trans Temperature Required	___	
Learn Neutral to Drive Garage Shift		
N-1 UD CVI	_____	_____
Trans Temperature Required	___	
Learn 1st 2-3 Shift After Restart or Shift into Reverse		
2-3 OD CVI	_____	_____
Trans Temperature Required	___	
Throttle Angle	___	
Learn 2-3 and 3-4 Up Shift		
OD CVI	_____	_____
Trans Temperature Required	___	
Learn 4-3 Coastdown and Part Throttle Kickdown		
UD CVI	_____	_____
Trans Temperature Required	___	
Learn 1-2 Up Shift and 3-2 Kickdown		
2C CVI	_____	_____
Trans Temperature Required	___	
Learn Manual 2-1 Pulldown and Neutral to Reverse Shift		
LR CVI	_____	_____
Trans Temperature Required	___	
Learn Neutral to Reverse Shift		
LR CVI	_____	_____
Trans Temperature Required	___	
Learn 4-5 Up Shift		
2C Alt CVI	_____	_____
Trans Temperature Required	___	
Throttle Angle	___	

Notes:

Notes:

SPECIAL TOOLS

The following special tools are used to disassemble/assemble the RFE series transmissions:

- **8249 — Spring Compressor:** Used to install second clutch return Belleville spring retaining ring
- **8250 — Spring Compressor:** Used to compress fourth clutch piston coil spring assembly
- **8251 — Spring Compressor:** Used to compress Underdrive piston return coil assembly
- **8252 — Piston Installer:** Used to install the Balance and Underdrive pistons
- **8253 — Seal Installer:** Used to install the shift lever rotating shaft seal
- **8254 — Grommet Installer:** Used to install the oil fill tube grommet
- **8255 — Pump Cover Installer:** Used to install the oil pump cover assembly
- **8257 — Transmission Support Stand:** Used to support the transmission upside down on the workbench
- **8258 — Valve Body Pressure Test Fixture Adapter:** Used for pressure testing clutches
- **8259 — Pressure Line Adapter:** Used to confirm proper line pressure and test line pressure sensor accuracy
- **8260 — Input Clutch Pressure Fixture:** Used for pressure testing the Reverse, O/D and U/D clutches
- **8261 — Alignment Plate:** Used to align the output shaft during clearance checking procedure
- **8266 — End Play Socket Set:** Used for measuring input and output shaft end play
- **8285 — Spring Compressor**: Used to compress the L/R spring
- **8320 — Bearing Installer:** Used to install the output shaft ball bearing
- **8321 — Filter Installer:** Used to install the cooler return filter
- **8504 — U/D Piston Installer:** Used to install the U/D piston

GLOSSARY

Belleville Return Spring: A round, slightly cone-shaped disc used to return a hydraulic piston in a clutch assembly to a static, unapplied position.

Diagnostic Trouble Code: P-Code stored in Transmission Control Module memory, indicating a malfunction with the transmission or its control system and is obtained by using the Diagnostic Scan Tool. The Diagnostic Scan Tool retrieves and displays the code(s).

Hub: The inner component of a multi-disc clutch that is splined with the friction discs of the clutch and a component of the planetary gear set. When the clutch is applied, the hub will drive, rotate or hold a planetary gear set component.

Input Clutch Assembly: The input clutch assembly contains the U/D, O/D and Reverse clutches.

Low Reverse Clutch: A holding clutch located between the Planetary Gear assembly and rear of the transmission case. Used in Park, Reverse, Neutral and First gears.

Oil Pump: A hydraulic pump used to circulate fluid under pressure to apply clutches, lubricate components and cool the transmission.

Overdrive: A gear range in the transmission with an output speed greater than its input speed. For example, every 0.75 revolutions of input, the output will rotate one revolution (0.75:1).

Overdrive Clutch: Located in the Input Clutch assembly and used in Third gear, Third gear Limp-In, Fourth and Fifth.

Overrunning Clutch: A holding clutch located in the L/R Clutch assembly, used in First gear.

Quick Learn: A procedure performed using the Diagnostic Scan Tool that pre-programs the Transmission Control Module for learning clutch fill volumes after a repair to the transmission has been made.

Reverse Clutch: Located in the Input Clutch assembly and used in Reverse only.

Solenoid: An electrically operated magnetic device used to operate a unit. A moveable iron core is placed inside a coil of wire that moves when electrical current is fed to the coil because of magnetic attraction. When current flows through the coil, the core tries to center itself in the coil. This centering action causes the core to exert considerable force on anything it is connected to.

Transmission Range Sensor: A component that allows for accurate measurement of transmission gear position.

Underdrive Clutch: Located in the Input Clutch assembly and used in all gear ranges except Park, Reverse, Neutral, Fourth and Fifth.

Valve Body: A component of an automatic transmission that contains the hydraulic valves. The valves are shifted to apply friction elements that control planetary gear set components.

Vent: Hole in the clutch packs that allow fluid to be vented.

2nd Clutch: A holding clutch located between the Input Clutch assembly and Planetary Gear assembly. Used in Second gear, Second Limp-In and Fifth.

4th Clutch: A holding clutch located between the Input Clutch assembly and Planetary Gear assembly. Used in Second Prime and Fourth gears.

APPENDIX A

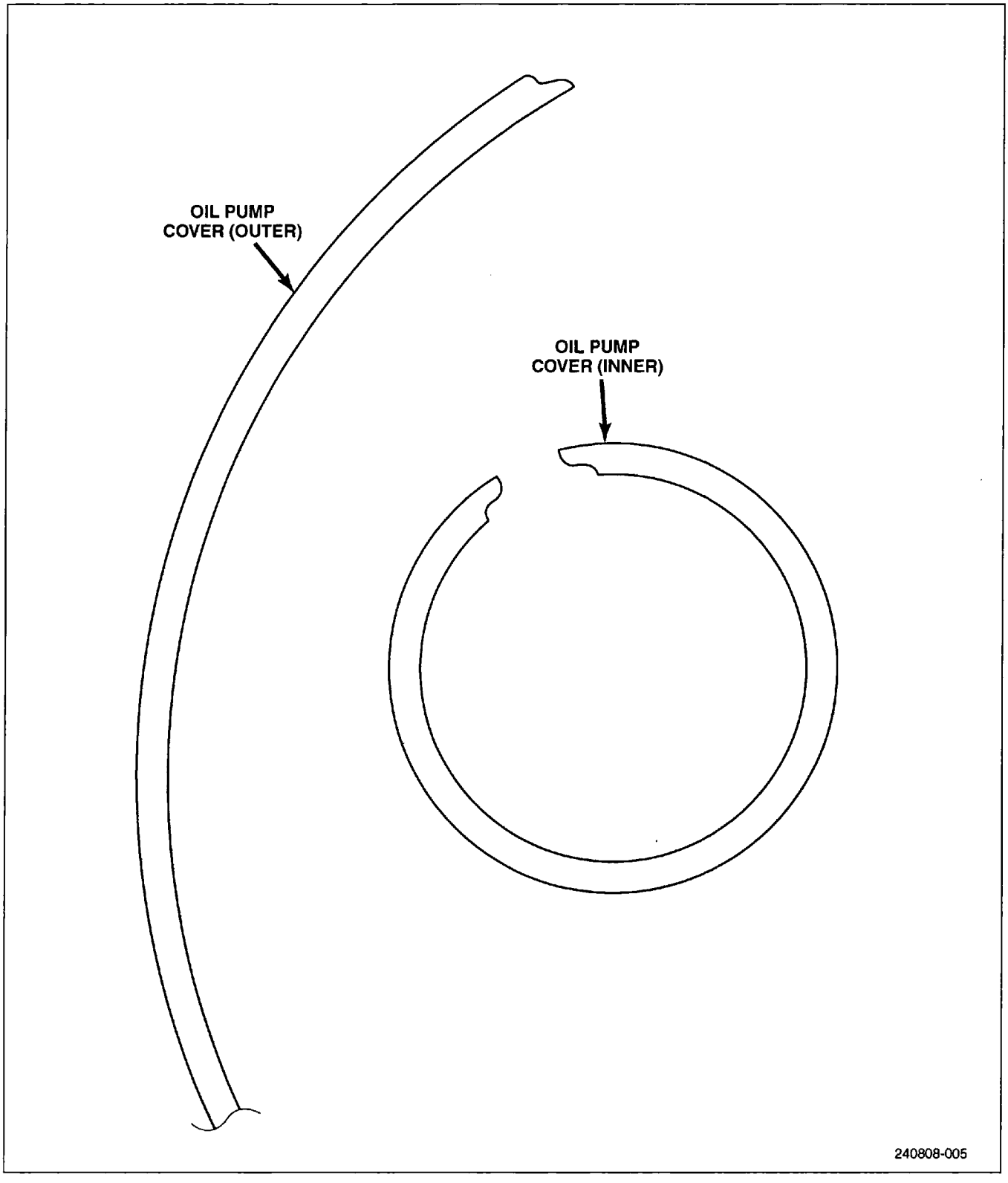

Figure 76 Oil Pump Cover Snap Rings

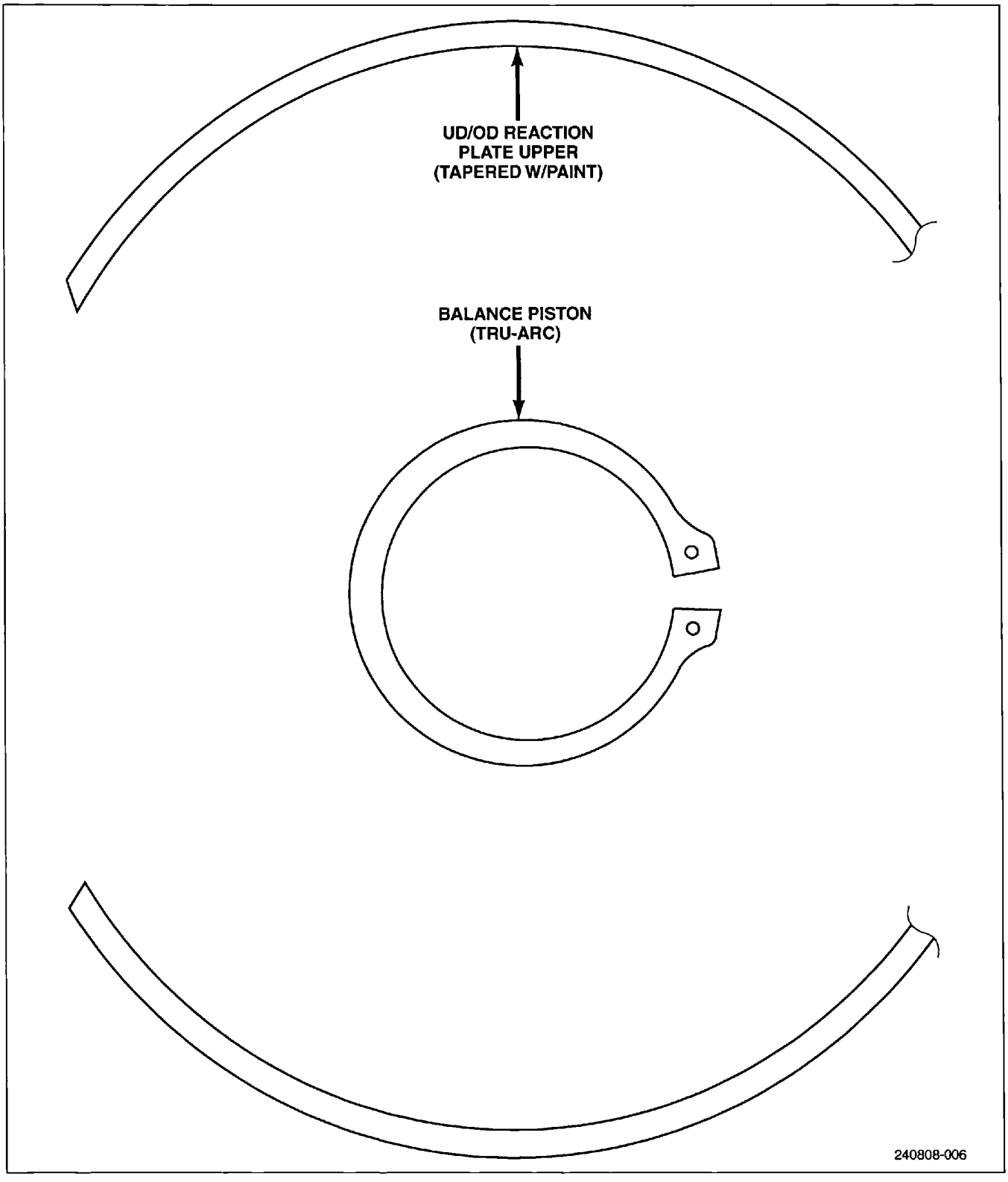

Figure 77 UD/OD and Balance Piston Snap Rings

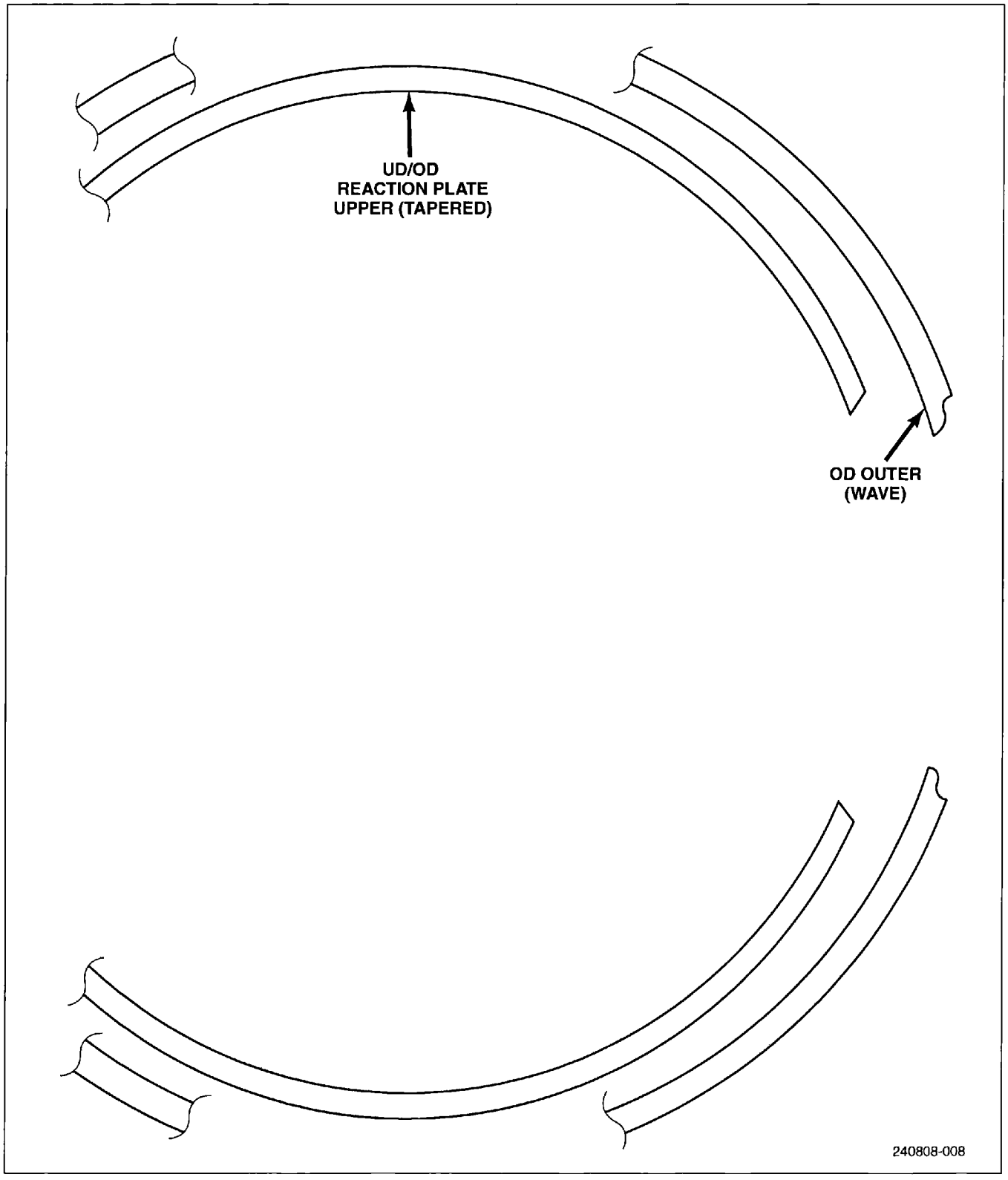

Figure 78 UD/OD Reaction and Outer (Wavy) Snap Rings

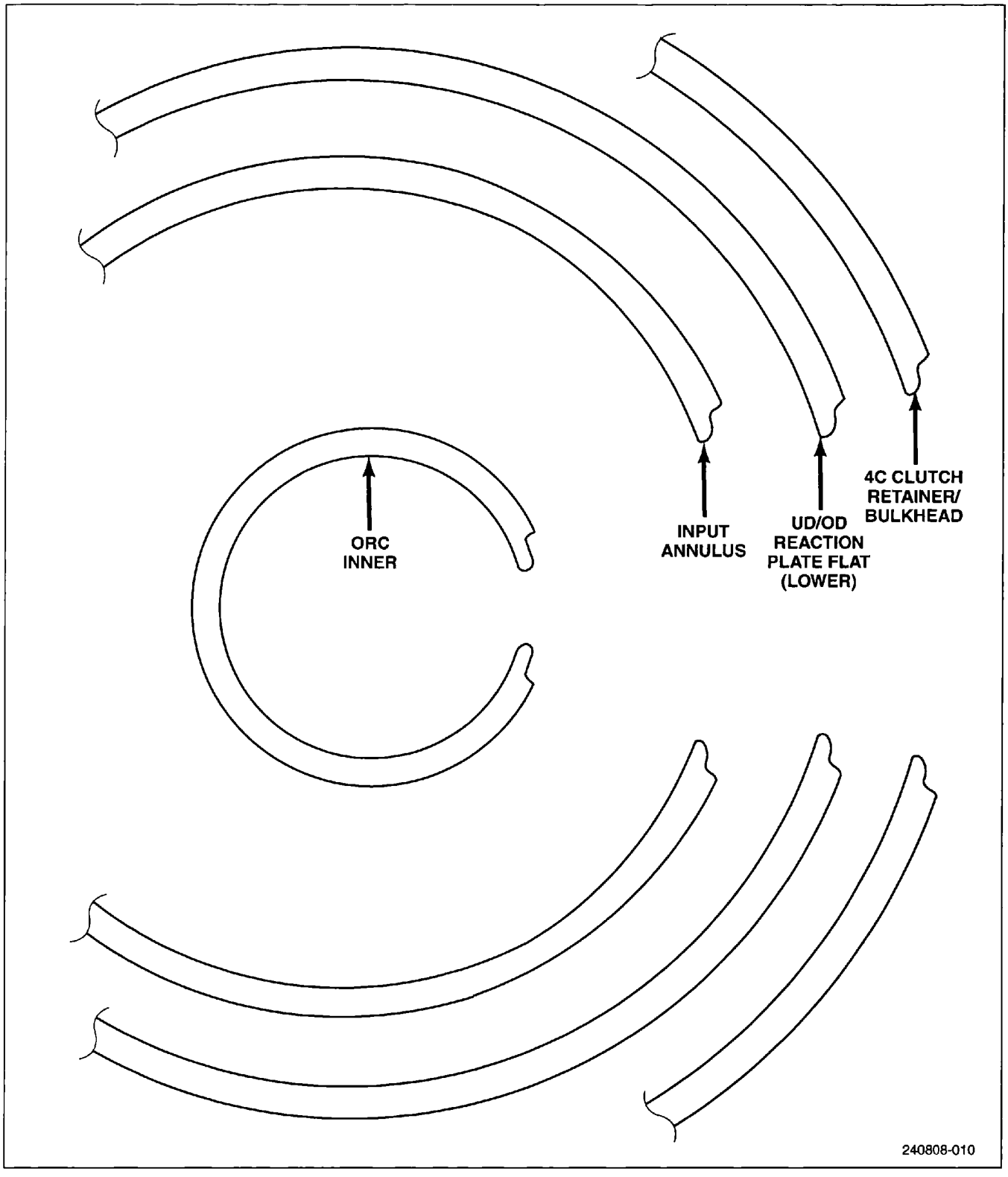

Figure 79 Mid Transmission Snap Rings

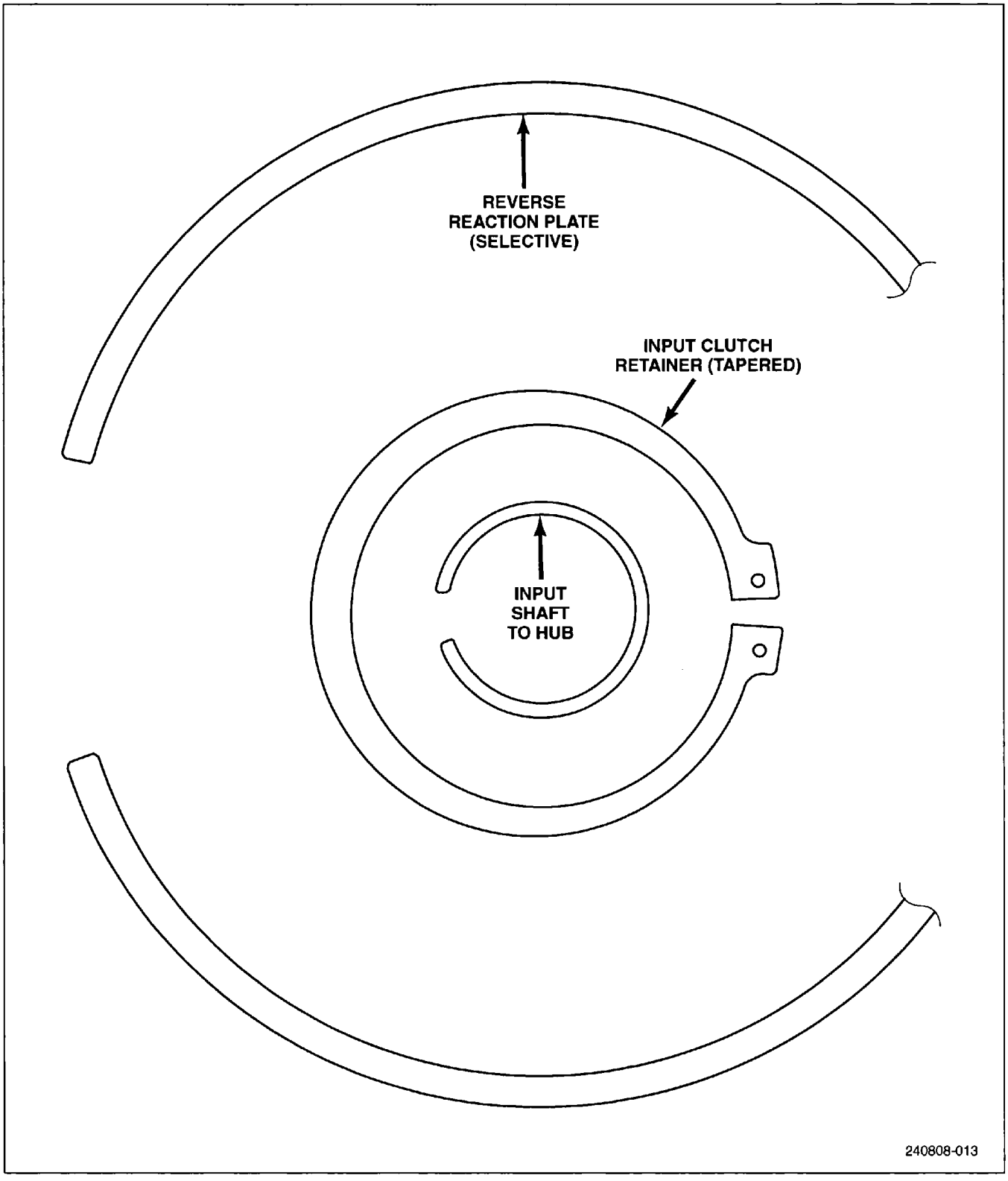

Figure 80 Input Clutch Snap Rings

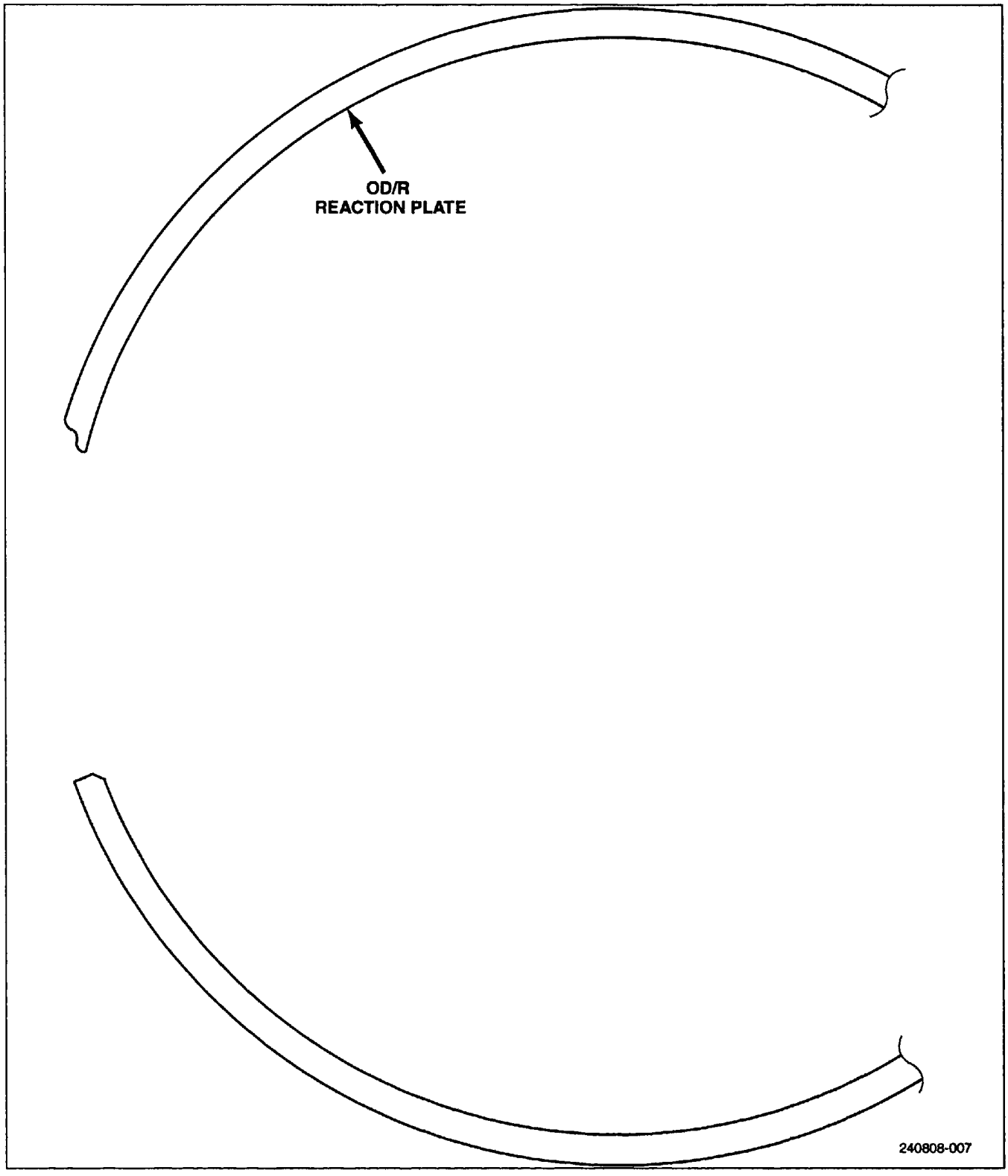

Figure 81 OD/REV Pressure Plate Snap Ring

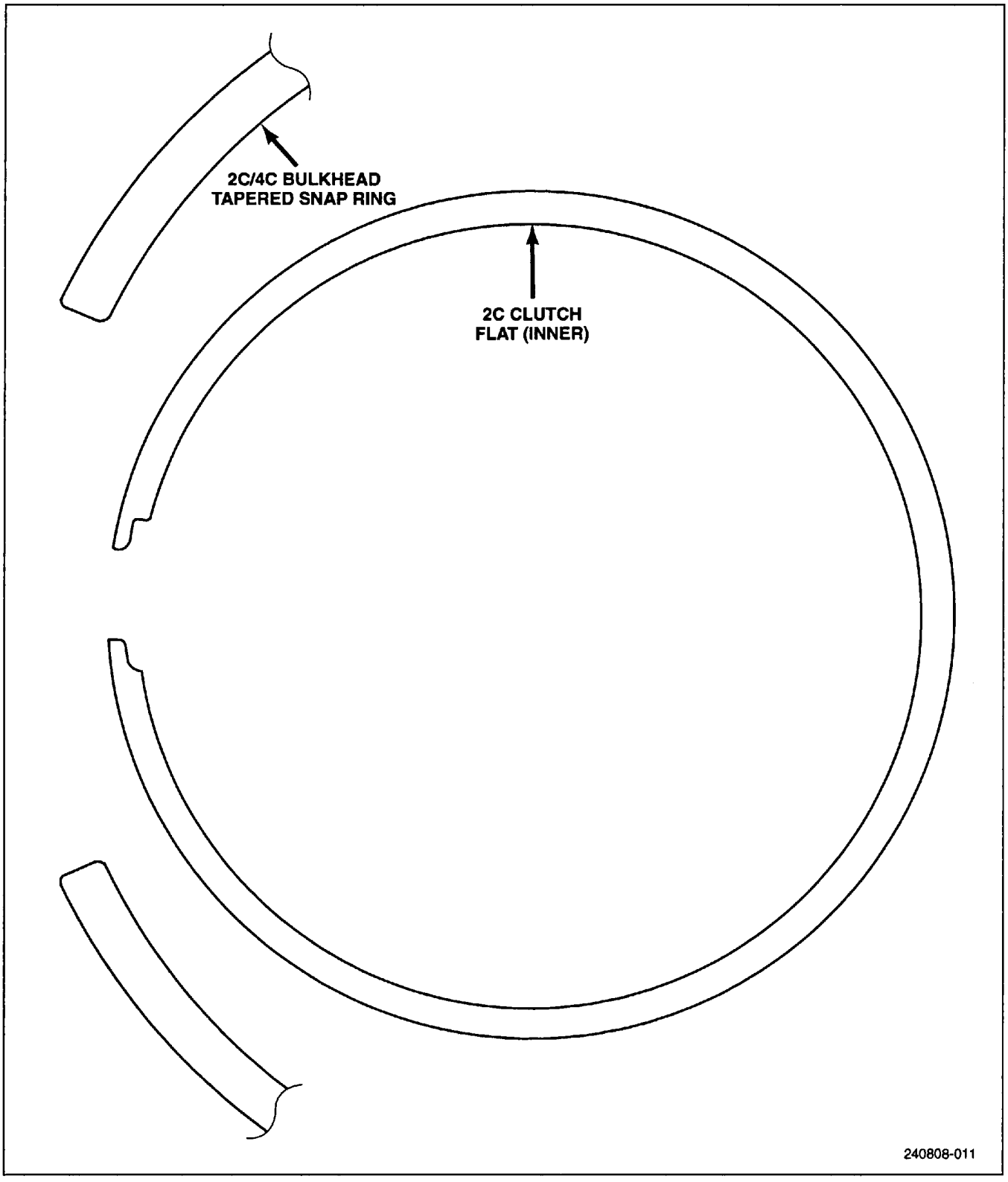

Figure 82 2C and 4C Clutch Snap Rings

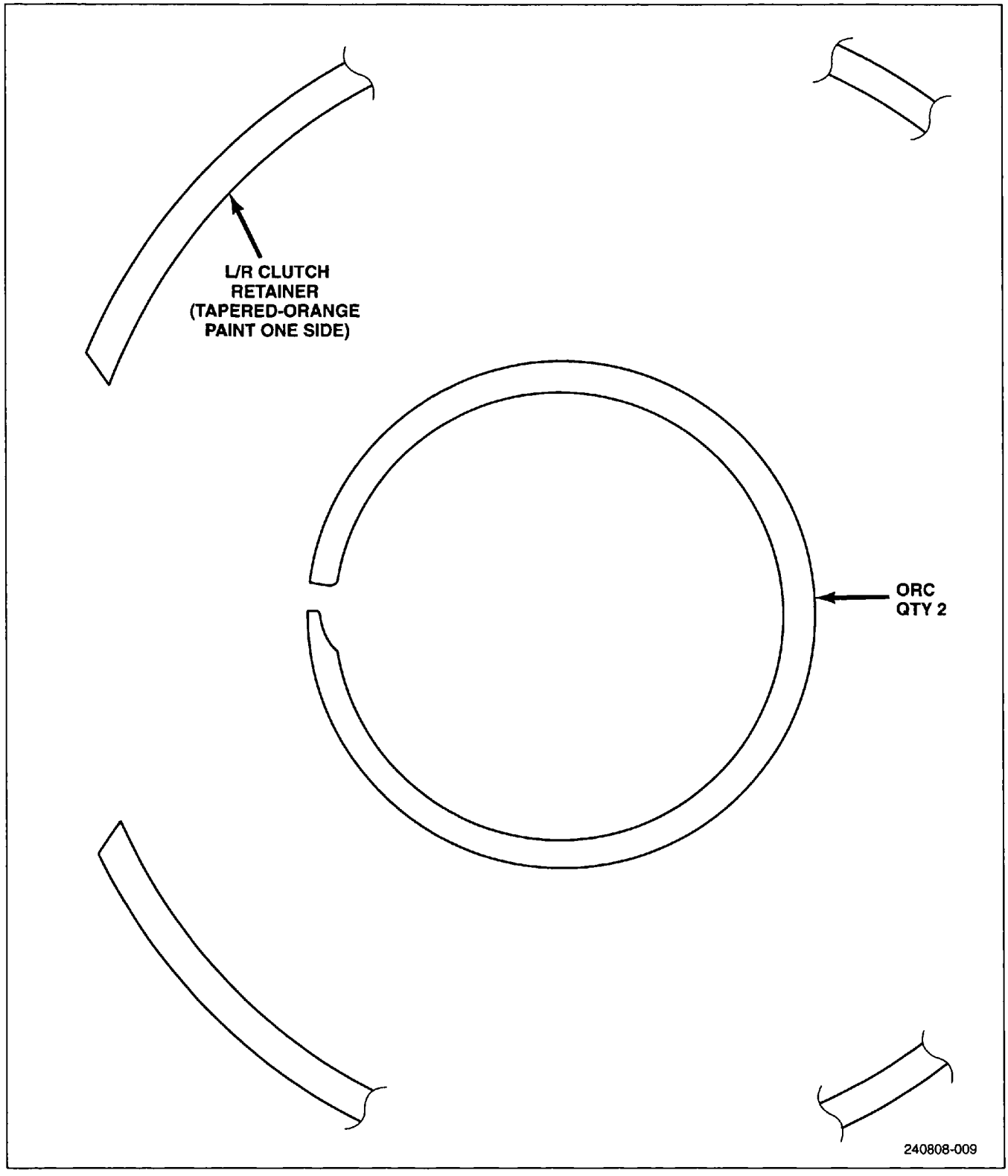

Figure 83 L/R Clutch Retainer and Output Snap Rings

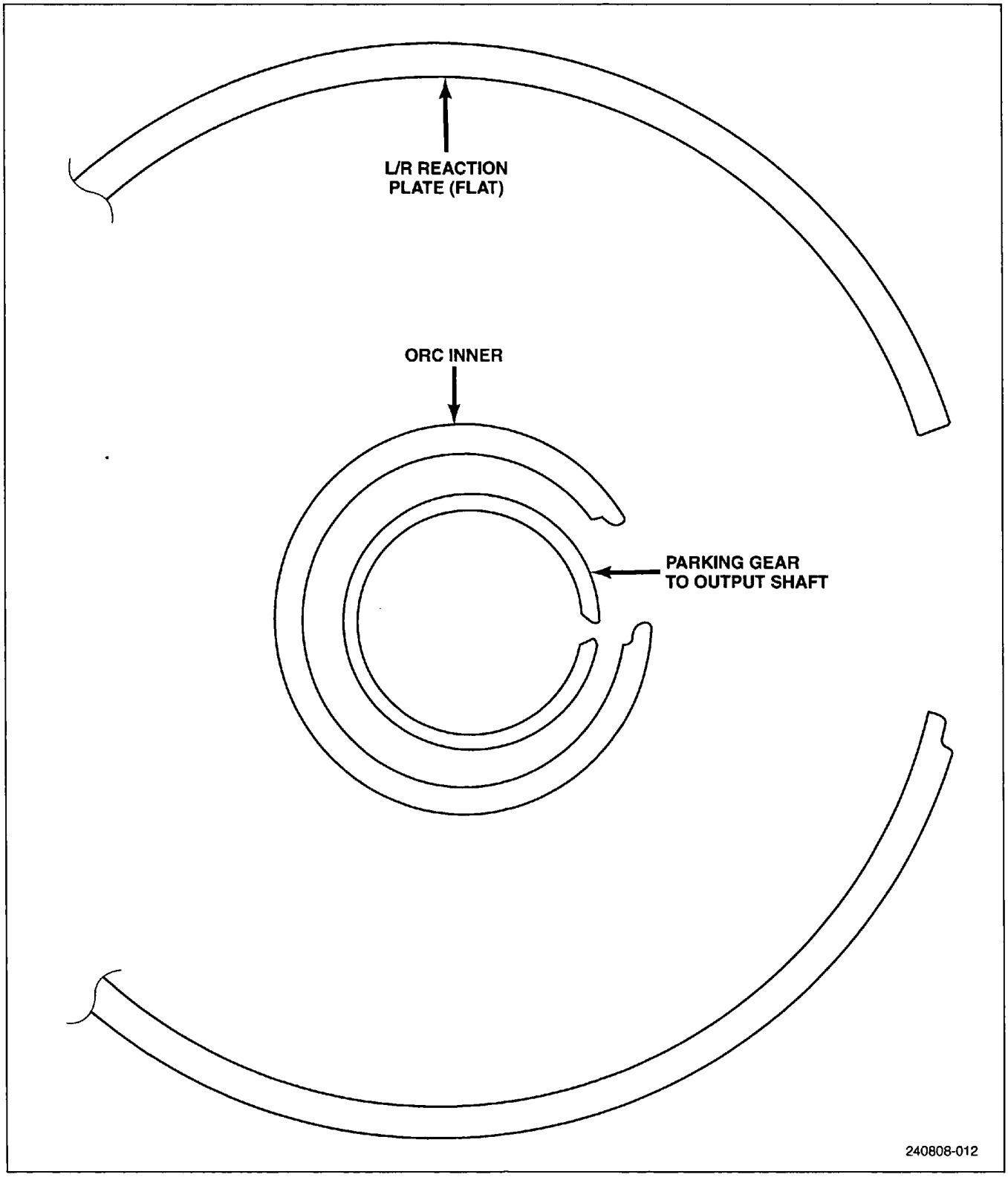

Figure 84 L/R Reaction Snap Ring

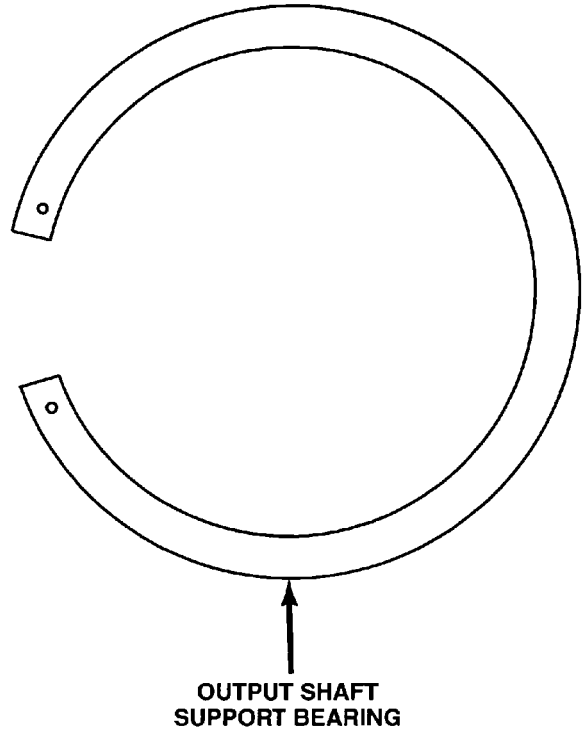

Figure 85 Output Shaft Support Bearing

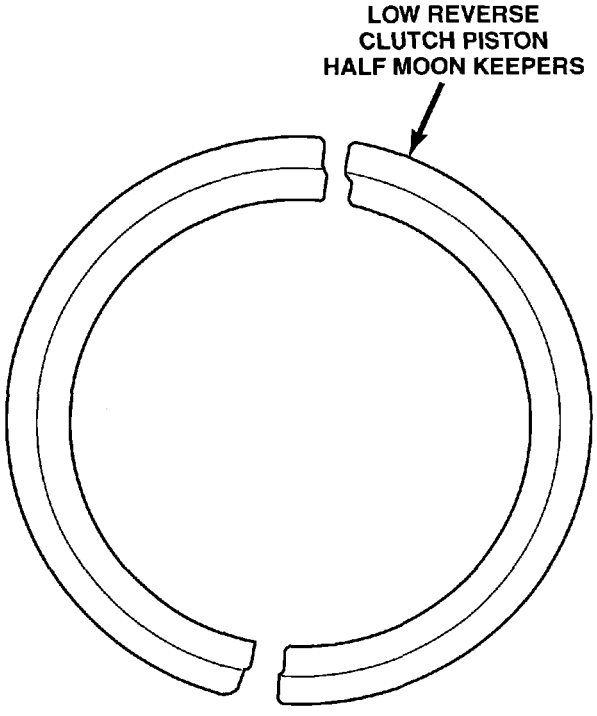

240808-023

Figure 86 L/R Clutch Piston Half Moon Keepers

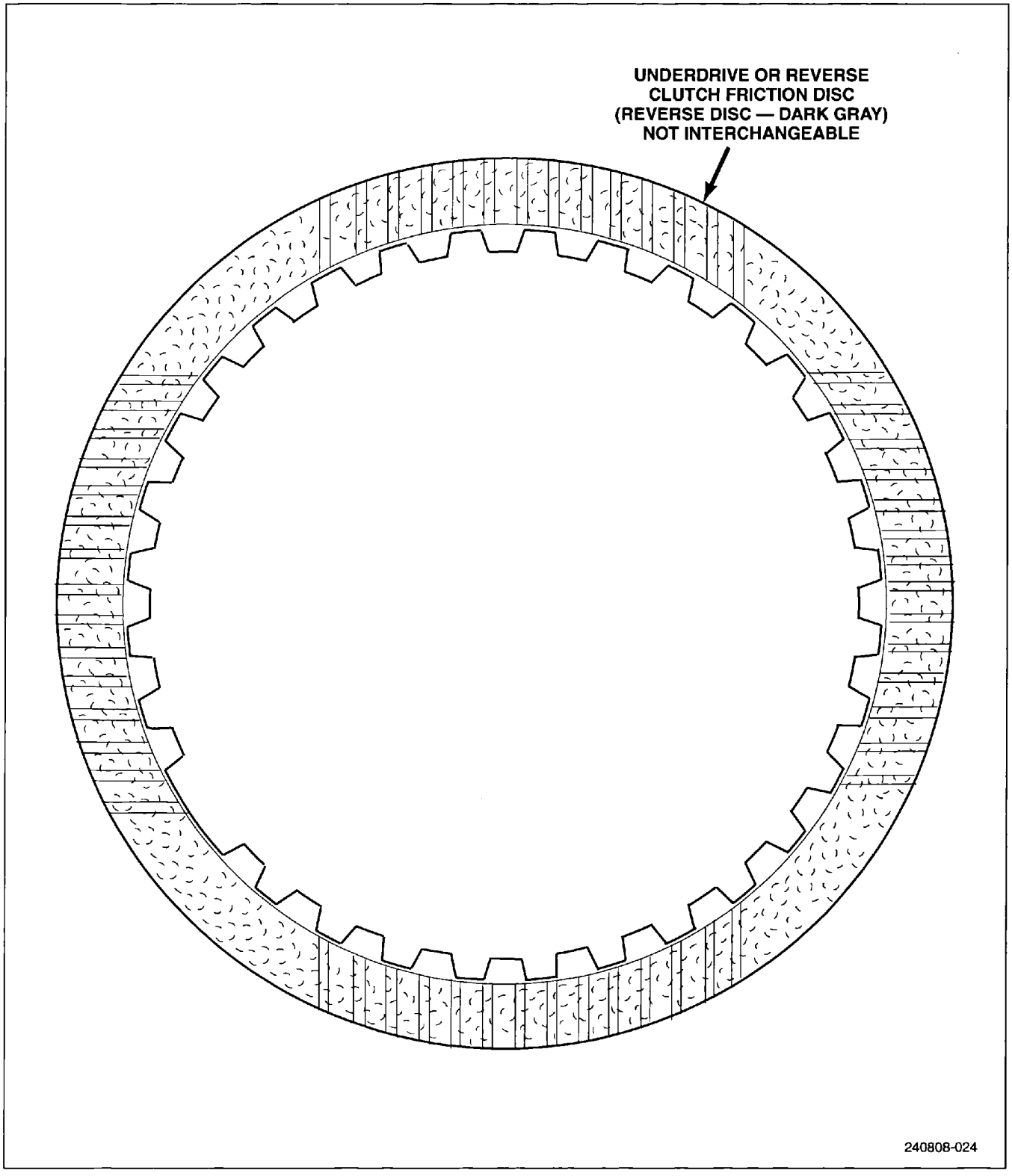

Figure 87 Underdrive or Reverse Disc

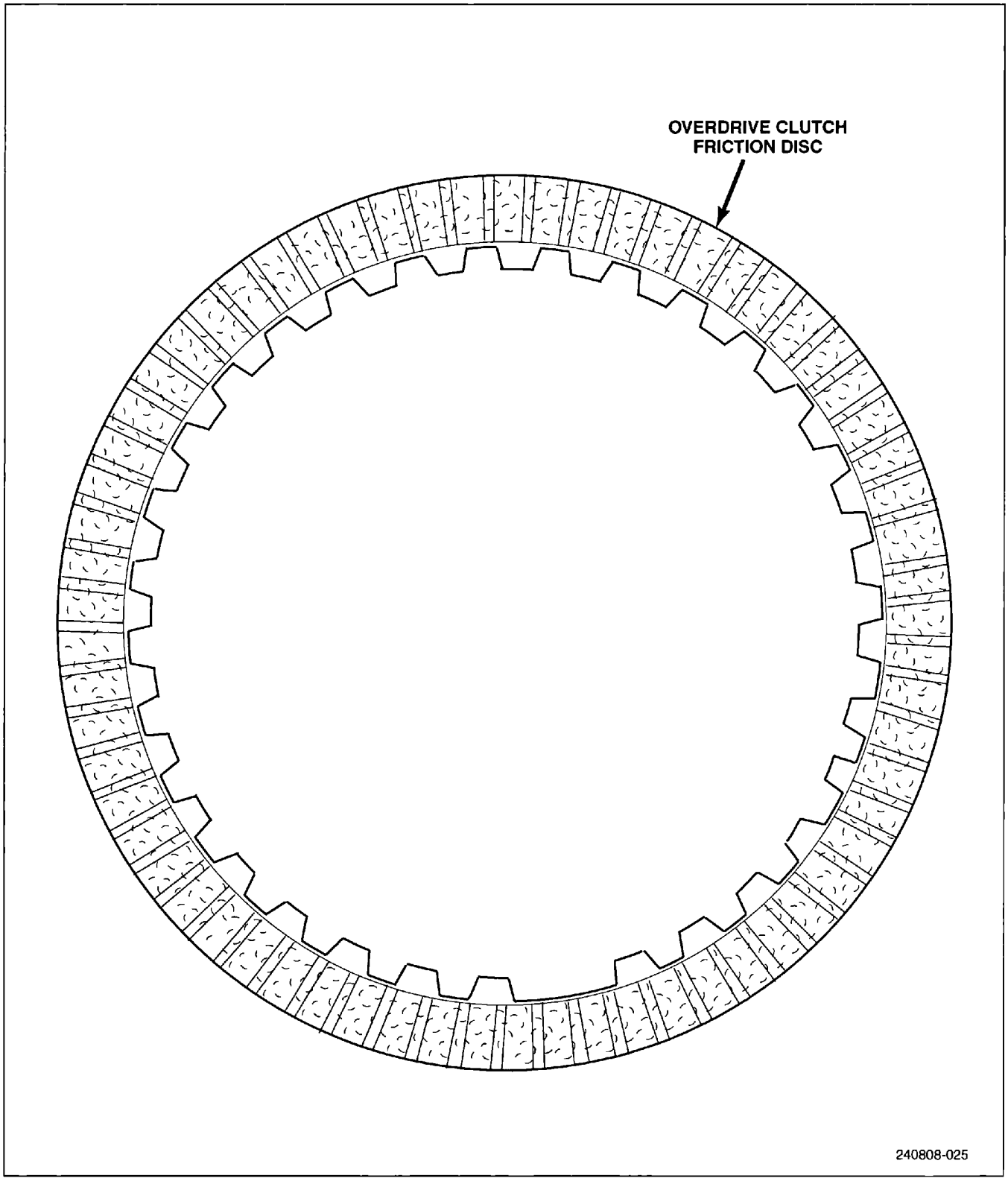

Figure 88 Overdrive Disc

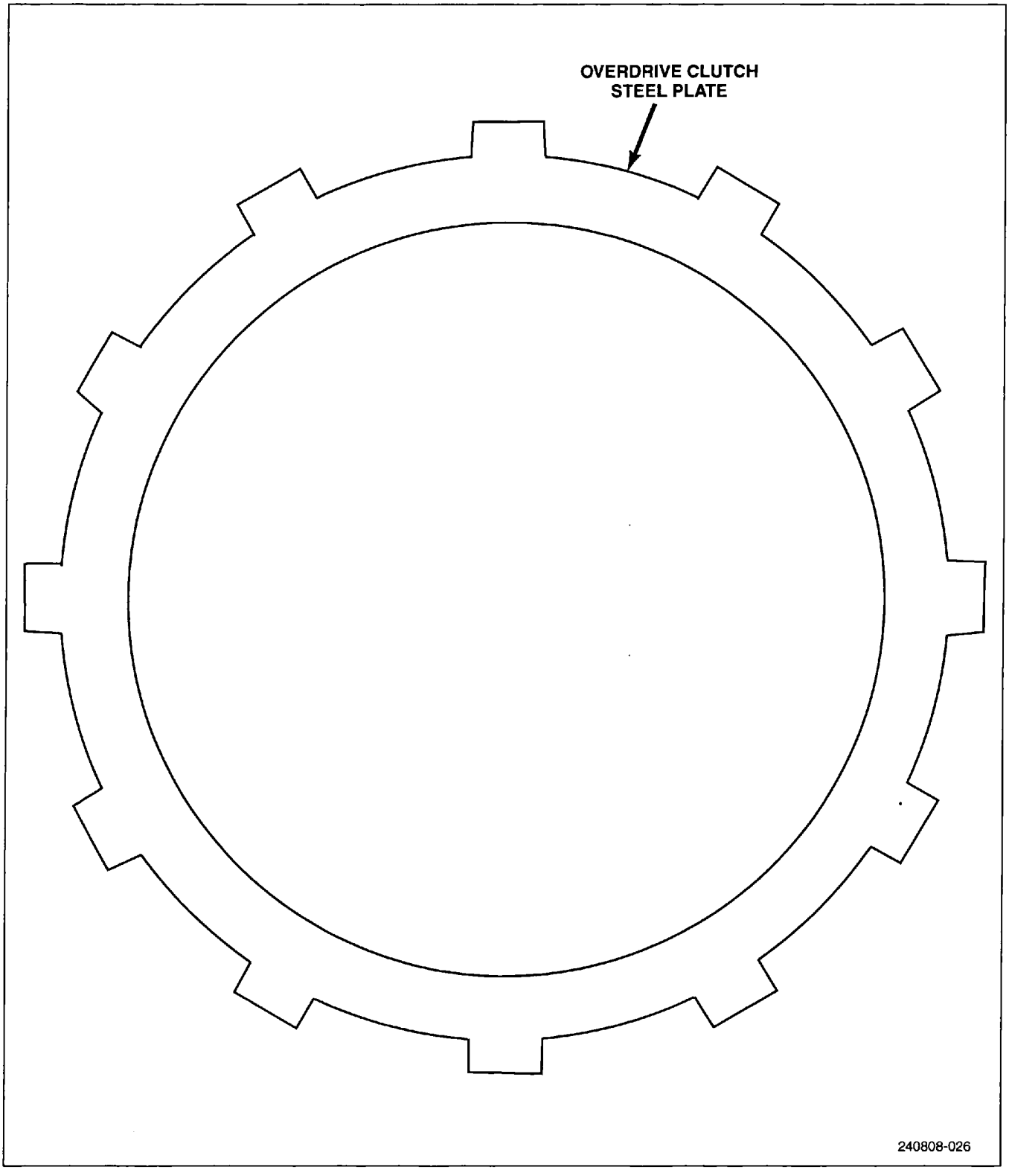

Figure 89 Overdrive Steel Plate

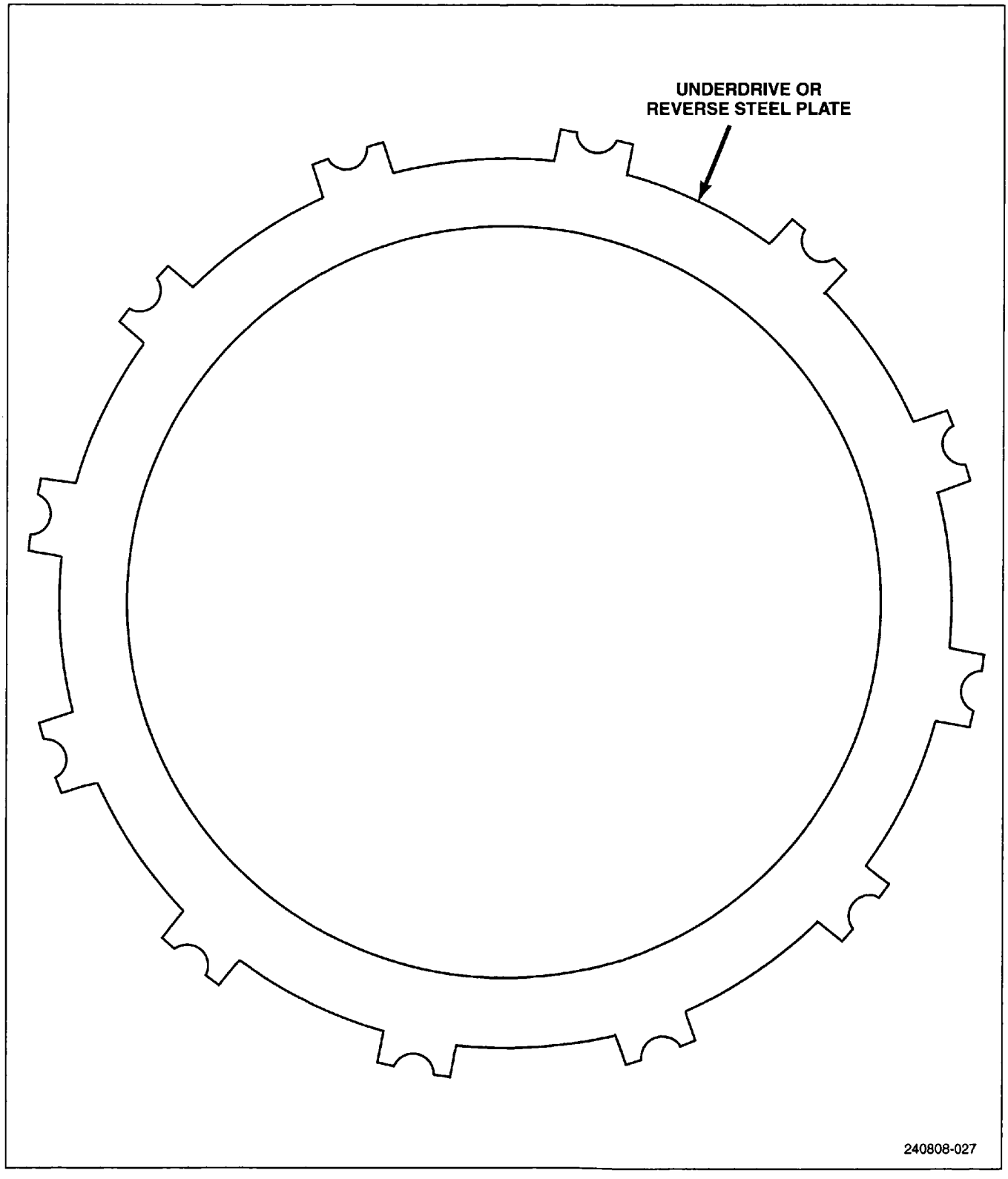

Figure 90 Underdrive or Reverse Steel Plate

DaimlerChrysler Corporation

UNITED STATES

The special service tools referred to herein are required for certain service operations. These special service tools or their equivalent, if not obtainable through a local source, are available through the following outlet.

28635 Mound Road, Warren, Michigan 48092, U.S.A.

MILLER SPECIAL TOOLS
OTC Division, SPX Corporation

Telephone 1-800-801-5420 FAX 1-800-578-7375

CANADA

The special service tools referred to herein are required for certain service operations. These special service tools or their equivalent, if not obtainable through a local source, are available through the following outlet.

C & D Riley Enterprises Ltd., P.O. Box 243, Amherstburg, Ontario N9V 2Z4
Telephone (519) 736-4600 FAX (519) 736-8433

The special tools referred to herein are required for certain service operations. These special service tools or their equivalent, if not obtainable through a local source, are available through the following outlet.

MILLER SPECIAL TOOLS **OTC Division, SPX Corporation** 28635 Mound Road, Warren, MIchigan 48092, U.S.A. Telephone 01-810-582-5831420 FAX 01-810-582-5830	**SPX Australia** 7 Expo Court Mt. Waverly/Victoria Australia 3149 FAX: 61-3-9544-5222	**Jurubatech** AV. N. SRA. DoSabara 4901 Sao Paulo Brazil FAX: 55-11-246-2793
SPX UK Churchill Way, High March Daventry, Northants, NN11 4NFI Tel: 44-1327-303400 FAX: 44-1327-871625	**Jatek** 5-53 Minowacho 2-Chome Kohoku-Ko Yokohama, Kanagawa 223-0051 Japan FAX: 81-45-562-7800	**SPX De Mexico** AV. Cafetales 1702, Despacho 204 Col. Haciendi de Coyoacan C.P. 04970 Mexico FAX: 525-603-0567

WE ENCOURAGE
PROFESSIONALISM

THROUGH TECHNICIAN
CERTIFICATION

TRAINING PROGRAM
DEVELOPMENT DEPARTMENT

DaimlerChrysler Corporation

81-699-03023

LITHO IN U.S.A.